Dual-Cell Li-ion Battery Charging Control IC

Features

- Three-stage charging: trickle charge / constant current (CC) / constant voltage (CV), with internal charging current up to 1A
- Supports pre-charge for deeply discharged (0V) batteries
- Short-circuit protection
- Reverse-polarity protection at battery terminals
- Intelligent thermal regulation: charging current decreases with rising temperature, enabling maximum safe charging without triggering thermal shutdown
- Abnormal battery detection
- Cell balancing during charging
- Automatic recharge
- Supports external NTC thermistor for temperature-controlled charging
- Highly integrated design requiring minimal external components

Applications

Dual-cell Li-ion battery charging

Description

The ZCC1130T is a fully integrated dual-cell Li-ion battery charger with reverse-polarity protection at the battery terminals, employing constant-current/constant-voltage (CC/CV) linear control. Its minimal external component count makes the ZCC1130T an ideal choice for portable applications. It supports operation from both USB power supplies and AC adapter sources.

An internal PMOSFET architecture with reverse charging protection eliminates the need for external sense resistors and isolation diodes. Thermal feedback automatically regulates the charging current to limit die temperature during high-power operation or elevated ambient conditions. The full-charge voltage is fixed at 4.25V per cell, with a preset charging current of 1A. Once the battery voltage reaches 4.25V, the charging current tapers to 1/10 of the programmed value, and the ZCC1130T automatically terminates charging.

When the input supply (AC adapter or USB source) is removed, the ZCC1130T automatically enters a low-current standby mode with battery leakage current below 3μA. Additional features include a charge current monitor, undervoltage lockout (UVLO), automatic recharge, and two status pins that indicate charge completion and input power presence.

Typical Application Diagram

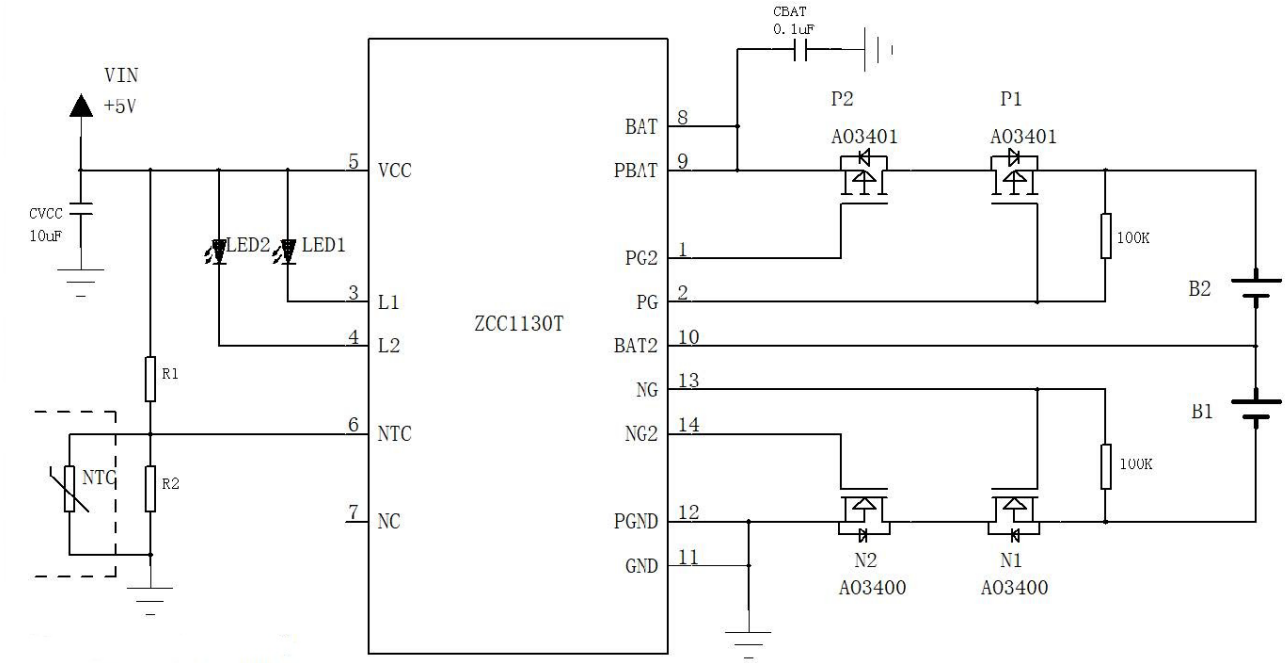

NOTE: Leave the NCT pin floating or tie it to GND when not in use.
NOTE: The CBAT capacitance must not exceed 1 μF, excessive capacitance may cause abnormal charging behavior.

Pin Configuration and Device Identification

The ZCC1130T is offered in a 14-pin SOP-14 package. The top view is shown below:

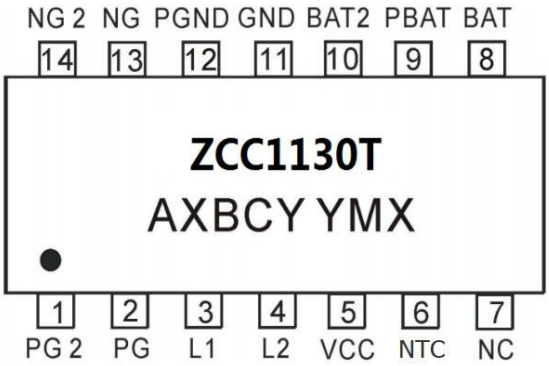

ZCC1130T: Product Code
A: Product Code
X: Internal Code
BCY: Internal Quality Control Code
YMX: D/C

Pin Functions

No.	Name	Description
1	PG2	Gate drive for external PMOS2 transistor
2	PG	Gate drive for external PMOS2 transistor
3	L1	Red LED pin
4	L2	Green LED pin
5	VCC	Positive supply input
6	NTC	External battery NTC temperature sense pin; allows charging status to be set based on ambient temperature
7	NC	No connect
8	BAT	Battery positive terminal
9	PBAT	Battery positive terminal; should be tied to BAT in application circuits
10	BAT2	Midpoint pin for two-cell batteries
11	GND	Ground (negative supply)
12	PGND	Power Ground (negative supply); should be tied to GND in application circuits
13	NG	Gate drive for external NMOS2 transistor
14	NG2	Gate drive for external NMOS2 transistor

NOTE: During testing, pin 8 (BAT) must be connected to pin 9 (PBAT), and pin 11 (GND) must be connected to pin 12 (PGND).

Functional Block Diagram

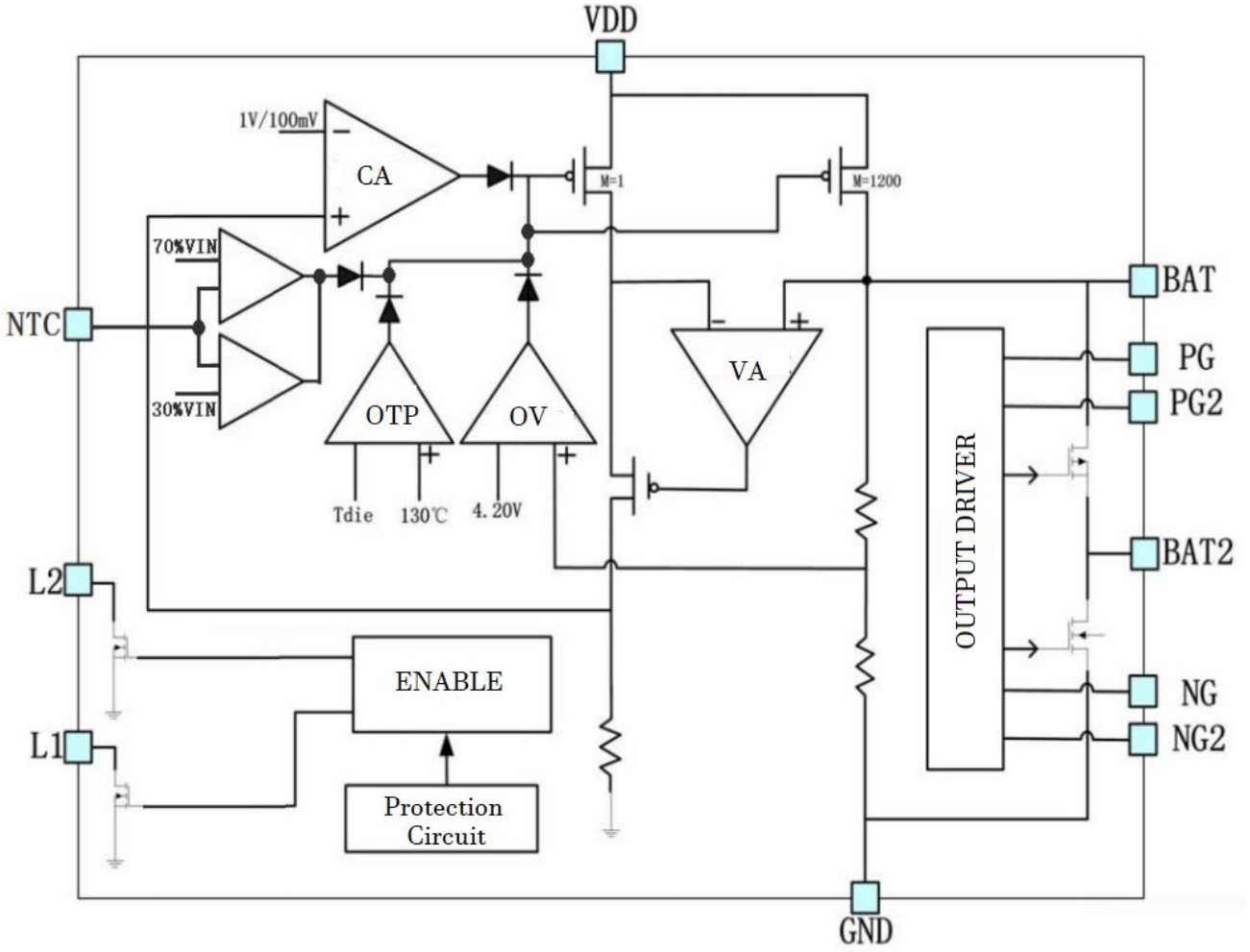

Ordering Information

Package Type	Chip Marking	Ordering Part Number
4-Pin SOP-14, Pb-free	ZCC1130TS14P	ZCC1130TS14P

LED Operating Status Table

VIN	BAT	L1 (CHRG)	L2 (STDBY)
Disconnected	Connected	OFF	OFF
Connected	Disconnected	ON	OFF
Connected	Charging	ON	1 Hz Flash
Connected	Fully Charged	OFF	ON
Connected	Battery Reverse-Polarity	4 Hz Flash	OFF
Connected	Battery <3 V after 0.5 h	4 Hz Flash	OFF
Input Over-Voltage Protection Triggered	Connected	4 Hz Flash	OFF
Input Under-Voltage Protection Triggered	Connected	4 Hz Flash	OFF

Absolute Maximum Ratings (Note 1)

Symbol	Parameter	Rating	Unit
V_{IN}	Power Supply Input Voltage Vin	GND−0.3 ~ GND+9	V
L1, L2	LED Output Pins L1, L2	GND−0.3 ~ GND+9	V
BAT, BAT2	Battery Positive Terminal	GND−4.2 ~ GND+9	V
T_{max}	Maximum Junction Temperature	135	°C
T_{stg}	Storage Temperature	−55 - 150	°C

Typical Characteristics

(Unless otherwise specified, all parameters are measured at room temperature, V_{CC}=5 V with GND as reference.)

Symbol	Characteristic	Test Condition	Unit	Min	Typ	Max
System Parameters						
V_{IN}	Input Voltage Range		V	4	5	6
V_{FLOAT}	Float Voltage Threshold		V	4.2	4.25	4.3
I_{CHRG}	Constant Current Charge Current	V_{DD}=5V	mA		800	
V_{TRKL}	Trickle-to-CC Transition	V_{BAT} Rising	V	–	2.8	–
V_{UV}	V_{CC} Undervoltage Lockout	V_{CC} Rising	V	–	3.5	–
V_{OVP}	V_{CC} Overvoltage Protection	V_{CC} Rising	V	–	6.5	–
V_{RECHG}	Recharge Threshold		V		4.1	
I_{CH1}	Trickle Charge Current		A	–	0.1	–

Symbol	Characteristic	Test Condition	Unit	Min	Typ	Max
I_{CH2}	Fast Charge Current		A	–	1	–
I_{LED}	Indicator LED Current		mA	–	2	
NTC	High-Temperature Threshold	V_{DD}=5V	%VCC	–	30	–
	Low-Temperature Threshold	V_{DD}=5V	%VCC	–	70	–
OTC	Over-Temperature Recovery	V_{DD}=5V	°C	–	130	–

Charger Insertion:

- When the charger is plugged in: LED_R stays ON, LED_B flashes at 1 Hz for 8 times to detect the battery status.
- Input Overvoltage Protection: When V_{DD} > 6 V, charging stops. LED_R flashes at 4 Hz (fast flashing), LED_B is OFF.
- Input Undervoltage Protection: When V_{DD} < 3.5 V, charging stops. LED_R flashes at 4 Hz, LED_B is OFF.
- No-Load Standby: LED_R stays ON, LED_B is OFF.
- Battery Reverse Connection Protection: When the battery is connected in reverse, LED_R flashes at 4 Hz, LED_B is OFF.
- Zero-Volt Battery Activation: If the battery cannot be charged to 3.0 V within 30 minutes, it is regarded as defective. LED_R flashes at 4 Hz, LED_B is OFF.
- Normal Charging: LED_R stays ON, LED_B flashes at 1 Hz. After full charge, LED_R turns OFF, LED_B stays ON.
- Battery Balance: After the battery is fully charged, the voltage difference between the two cells must be < 0.02 V.
- Battery Voltage Drop After Full Charge: Within 10 minutes after charging ends, the voltage drop must not exceed 0.02 V.
- If any cell triggers taper-current protection (charging current drops to zero or cell voltage suddenly falls to 4.08–4.12 V, judged as taper-current protection), charging stops and the full-charge status is displayed (LED_R OFF, LED_B ON).
- If any cell is judged to have triggered taper-current protection, a 20 mA / 1.5 s activation pulse will be applied to that cell.
- IC Leakage Current: (Note: When the charger's USB plug is removed but the battery is still inserted, the leakage current must not exceed 10 μA.)
- NTC Function: The NTC pin is configured as shown in the circuit model below. The NTC

resistor is mounted close to the battery to monitor its temperature, ensuring charging within the desired temperature range specified by the customer.

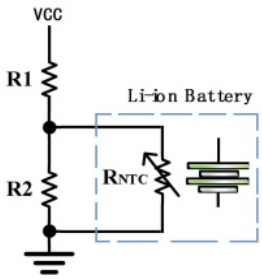

To prevent battery damage due to excessively high or low temperatures, the ZCC1130T monitors the battery temperature by measuring the NTC voltage. When the rate K ($K = V_{NTC}/V_{DD}$) reaches the UTP (K_{UT}) or OTP (K_{OT}) thresholds, the controller triggers UTP or OTP. If the NTC pin voltage is less than 30% of V_{CC} or greater than 70% of V_{DD}, it indicates the battery temperature is too low or too high, and charging will be suspended.

Select R2 and R1 to program the appropriate UTP and OTP temperature thresholds. For common 10 kΩ and 100 kΩ negative-temperature-coefficient (NTC) thermistors on the market, the following configurations are recommended:

Charging Temperature Range	R_{NTC}	NTC B Value	R1	R2	Model
0 °C~60 °C	10 kΩ, 1%	3380 K	6.5 kΩ	33.5 kΩ	
0 °C~60 °C	100 kΩ, 1%	3950 K	51 kΩ	187 kΩ	
-10°C~60 °C	10 kΩ, 1%	3380 K	6.2 kΩ	22 kΩ	
0 °C~45 °C	10 kΩ, 1%	3380 K	10.6 kΩ	57.5 kΩ	
0 °C~45 °C	100 kΩ, 1%	3950 K	95.7 kΩ	705 kΩ	
0 °C~45 °C	10 kΩ, 1%	3380 K	15 kΩ	None	

Functional Description

The ZCC1130T is a dual-cell lithium-ion battery charger utilizing a constant-current/constant-voltage (CC/CV) charging algorithm. It features dual-cell cross charging with integrated cell balancing capability. The device can supply up to 1 A charge current (with a thermally optimized PCB layout) and incorporates an internal P-channel power MOSFET and thermal regulation circuitry. No external isolation diode or sense resistor is required. In addition, the ZCC1130T can operate directly from a USB power source.

Normal Charging Cycle

When the V_{DD} pin voltage rises above the UVLO threshold, a charge cycle begins.

If the BAT pin voltage is below 2.8 V, the charger enters trickle charge mode, supplying approximately 100 mA to safely precondition the cell before full-current charging. When the BAT pin voltage exceeds 2.8 V, the charger switches to constant-current mode, delivering a constant programmed charge current to the battery. When the BAT pin voltage reaches the final float voltage (4.25 V), the ZCC1130T enters constant-voltage mode and the charge current begins to taper off. The charge cycle terminates automatically when the charge current drops to 100 mA (one-tenth of the programmed current).

Charge Status Indicators (CHRG, STDBY)

The ZCC1130T provides two open-drain status outputs, CHRG and STDBY. Indicator LED states are shown in the “Charge Status Indicator Table.” If the status indicator outputs are not used, leave the unused pins floating or tie them to GND.

Undervoltage Lockout (UVLO)

An internal undervoltage lockout (UVLO) circuit monitors the input voltage and keeps the charger in shutdown until V_{DD} rises above the UVLO threshold. If the UVLO comparator trips, the charger remains in shutdown until V_{DD} rises at least 50 mV above the battery voltage before exiting shutdown.

Battery Temperature Monitoring (NTC)

The ZCC1130T continuously monitors the voltage at the NTC pin to determine the actual battery temperature. The NTC pin is connected to two thermistors forming a voltage divider from V_{DD} (The UTP threshold is typically 70% of V_{DD}, and the OTP threshold is typically 30% of V_{DD}). During charging, if the voltage goes outside the 30%–70% range due to temperature variation, charging is suspended. To disable the NTC function, leave the NTC pin floating or connect it to GND. For recommended NTC configurations, refer to the Application Information section (page 5).

Thermal Regulation

If the die temperature attempts to rise above the preset limit of approximately 130 °C, an internal thermal feedback loop automatically reduces the programmed charge current.

This feature protects the ZCC1130T from overheating and allows the user to set higher charge currents for a given PCB power dissipation capability without risking device damage. The charge current can be selected based on typical (rather than worst-case) ambient conditions, knowing the charger will automatically reduce current under worst-case thermal conditions.

Demo Board Reference Layout

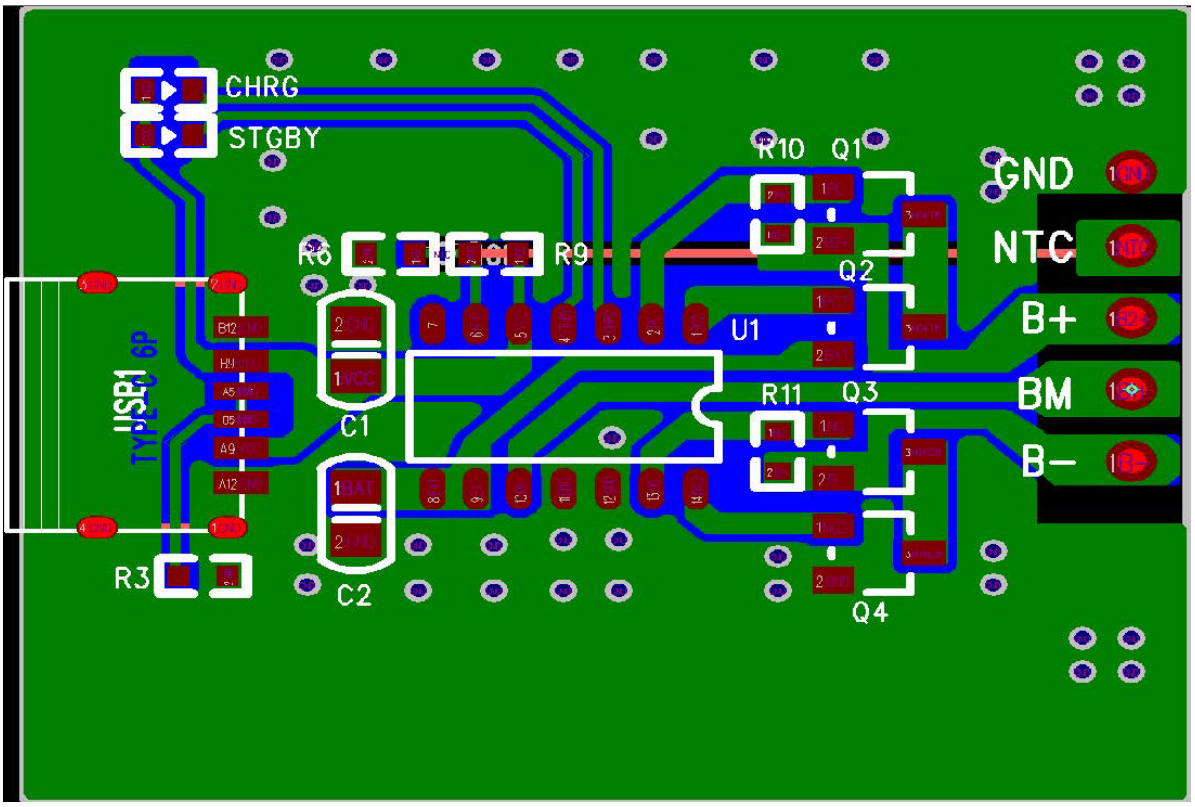

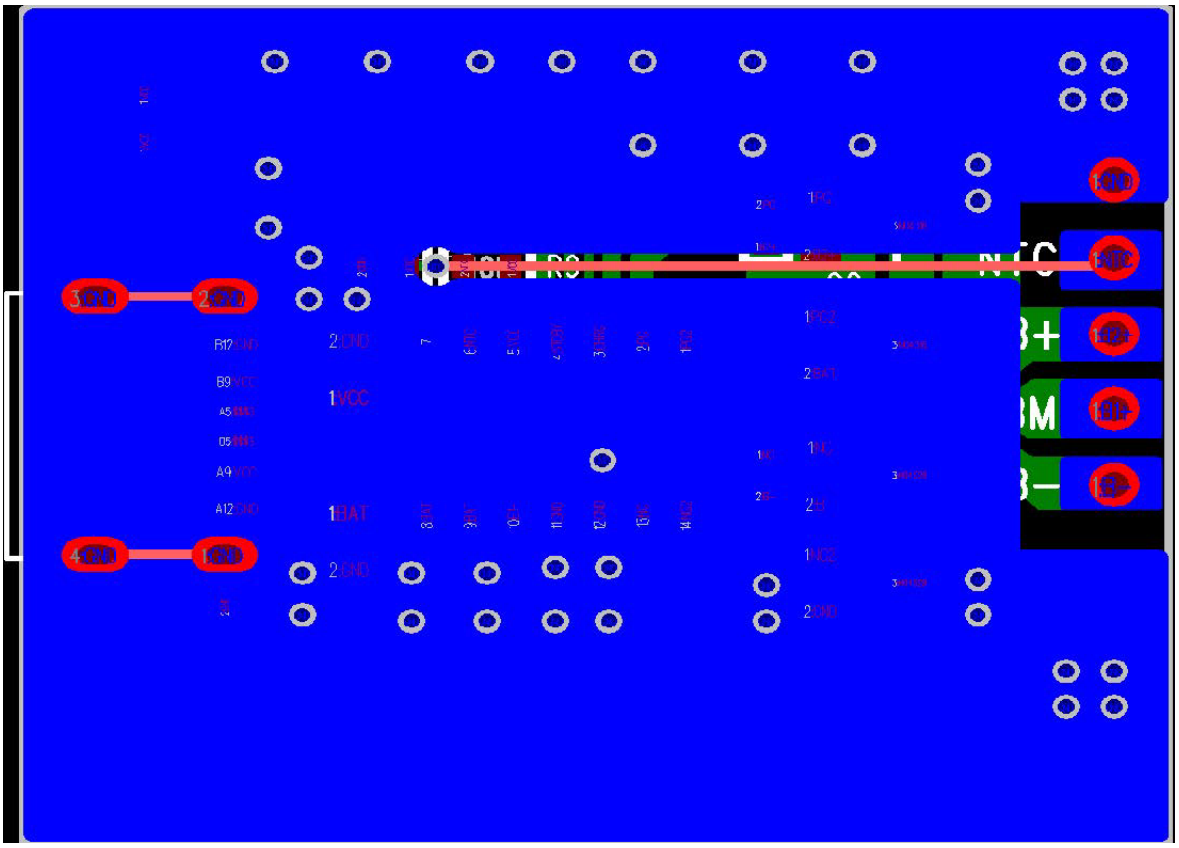

SOP-14 Package Outline Drawing

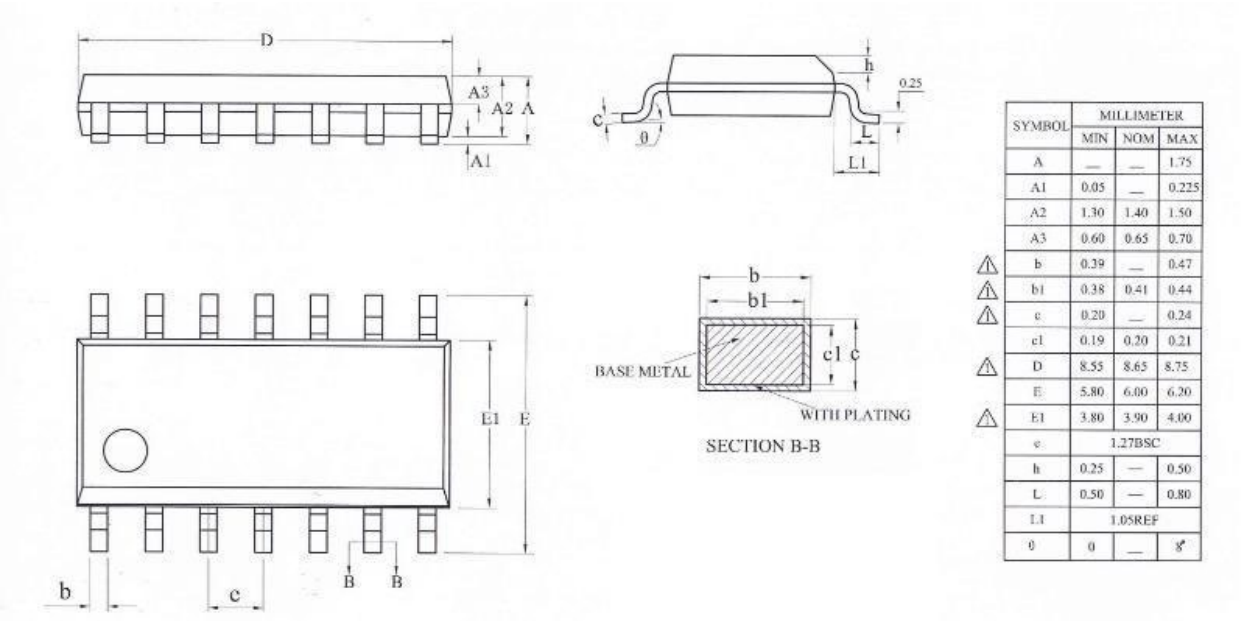

	SYMBOL	MILLIMETER		
		MIN	NOM	MAX
	A	—	—	1.75
	A1	0.05	—	0.225
	A2	1.30	1.40	1.50
	A3	0.60	0.65	0.70
⚠	b	0.39	—	0.47
⚠	b1	0.38	0.41	0.44
⚠	c	0.20	—	0.24
	c1	0.19	0.20	0.21
⚠	D	8.55	8.65	8.75
	E	5.80	6.00	6.20
⚠	E1	3.80	3.90	4.00
	e	1.27BSC		
	h	0.25	—	0.50
	L	0.50	—	0.80
	L1	1.05REF		
	θ	0	—	8°