3A Synchronous Buck Li-ion Charger

General Description

The ZCC6688 is a 3A 4.2V Li-Ion battery charger. It utilizes a 500KHz synchronous buck converter topology to reduce power dissipation during charging. Low power dissipation, an internal MOSFET allow a physically small charger that can be embedded in a wide range of handheld applications. The ZCC6688 includes complete charge termination circuitry, automatic recharge and a ±1% 4.2V float voltage.

Battery charge current, charge timeout and end-of-charge indication parameters are set with external components. Additional features include shorted cell detection; temperature qualified charging and overvoltage protection. The ZCC6688 is available in a low profile ESOP10 and QFN16 package.

Features

- Input voltage range 4V~10V
- Dynamic input current allocation for maximum charging rate
- 3.0A Maximum Charge Current
- No External MOSFETs and Blocking Diode Required
- Efficiency up to 90%
- Constant-Current/Constant-Voltage Operation with Thermal Regulation to Maximize Charge Rate Without Risk of Overheating
- Optional Battery Temperature Monitoring Before and During Charge Automatic Sleep Mode for Low-Power
- Over Current Protection
- Consumption Available in ESOP10 or QFN16
- RoHS Compliant and 100% Lead (Pb)-Free

Functional Pin Description

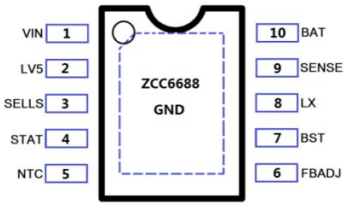

ESOP10

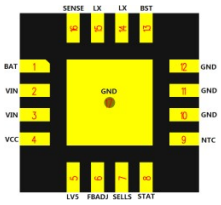

QFN16

Typical Application Circuit

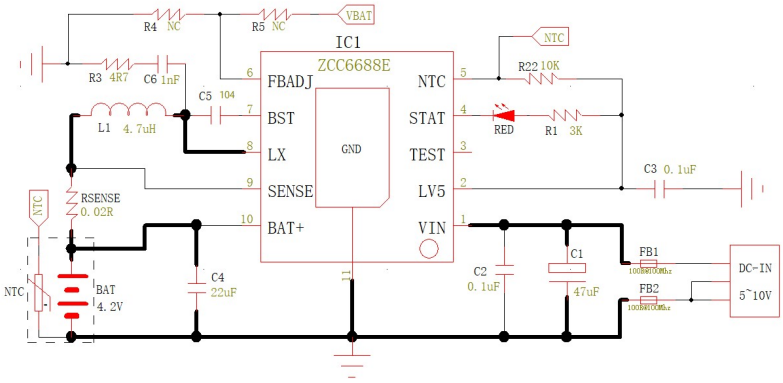

Applications

- Portable Media Players
- Cellular and Smart mobile phone
- PDA/DSC
- Handheld Battery-Powered Devices
- Handheld Computers
- Charging Docks and Cradles

Ordering Information

Order Number	Package Type	Float Voltage	Packing
ZCC6688E	ESOP10	4.20V	4000PCS/Pack
ZCC6688T	QFN16	4.20V	4000PCS/Pack

Pin Description

Pin Name	PIN Number		Description
	ESOP10	QFN16	
VIN	1	2,3	Positive Supply Voltage Input. Decouple with a 220μF or larger electrolytic capacitor.
VCC	/	4	IC Supply Voltage Input. Connect to Vin through a 4R7 resistor
LV5	2	5	5V LDO output PIN. Connect a minimum 0.1uF capacitor between this PIN and GND.
TEST	3	7	TEST pin . Keep this pin floting.
STAT	4	8	Open-Drain Charge Status Output. When the battery is charging, this pin is pulled low by an internal N-channel MOSFET. When the ZCC6688 detects an under voltage lockout condition, STAT is forced high impedance.
NTC	5	9	NTC (Negative Temperature Coefficient) Thermistor Input. This pin senses the temperature of the battery pack and stops the charger when the temperature is out of range.Connect to GND for disabling this function.
FBADJ	6	6	CV adjust PIN. Connect resistor to GND increase CV voltage. Connect resistor to VBAT decrease CV voltage.
BST	7	13	Internal charge pump boost pin.
LX	8	14,15	Switch pin. Connect to external inductor.
SENSE	9	16	Detecting pin of charge current.
VBAT	10	1	Battery pin. Connect to bat+.
GND	Thermal PAD	10,11,12,17	Thermal PAD . Connect to Ground.

Absolute Maximum Ratings Note 1

VIN /VBAT/SNS/LX to GND ---------- 12V
BST to LX ----------6.5V
ALL OTHER PINS to GND ---------- 6.5V
Maximum Junction Temperature ---------- 150℃
Operating Ambient Temperature Range (T_A) ---------- -40℃ to 85℃
Storage Temperature ---------- -45℃ to 165℃
Maximum Soldering Temperature (at leads, 10 sec) ---------- 260℃
Maximum Power Dissipation (ESOP10, P_D, T_A=25℃) ---------- 2W
Thermal Resistance (ESOP10, θ_{JA}) ---------- 50℃/W
HBM(Human Body Mode) ---------- 2KV
MM(Machine Mode) ---------- 200V

Note 1. Stresses beyond those listed under “Absolute Maximum Ratings” may cause permanent damage to the device. These are stress ratings only, and functional operation of the device at these or any other conditions beyond those indicated in the operational sections of the specifications is not implied. Exposure to absolute maximum rating conditions for extended periods may affect device reliability.

Electrical Characteristics

(ZCC6688/ZCC6688T for 4.20V ,T_A=25℃, V_{IN} = 5V, unless otherwise noted.)

Floating for 1 cells Lithium ion batteries charger.

Symbol	Parameter	Condition	Min	Typ	Max	Units
V_{IN}	Adapter/USB Voltage Range		4.5		10	V
I_{CC}	Input Supply Current	Standby Mode (Charge Terminated)		1		mA
V_{FLOAT}	Regulated Output (Float) Voltage	FBADJ floating	4.158	4.2	4.242	V
V_{RS}	Program Charging Current (For RS to BAT)	$V_{TRIKL}<V_{BAT}<V_{FLOAT}$		50		mV
I_{BAT}	BAT Pin Current	R_{SNS}=50mΩ, Current Mode		1000		mA
		R_{SNS}=25mΩ, Current Mode		2000		mA
		Standby Mode		4		μA
I_{TRIKL}	Trickle Charge Current	$V_{BAT}<V_{TRIKL}$, R_{SNS}=50mΩ		100		mA
		V_{BAT}<2.3V		20		mA
V_{TRIKL}	Trickle Charge Threshold Voltage	R_{SNS}=50mΩ, V_{BAT} Rising		2.8		V
V_{TRHYS}	Trickle Charge Hysteresis Voltage	R_{SNS}=50mΩ		100		mV
V_{STAT}	STAT Pin Output Low Voltage	I_{STAT}=5mA			0.5	V
I_{STAT}	STAT Pin Weak Pull-Down Current	V_{STAT}=5V			5	uA
ΔV_{RECHRG}	Recharge Battery Threshold Voltage	V_{FLOAT}-V_{RECHRG}		150		mV
T_{LIM}	Junction Temperature in Constant Temperature Mode			150		℃
I_{TERM}	C/10 Terminal Current	R_{SNS}=50mΩ		100		mA
VIN UVLO	Under Voltage Lockout of VIN	V_{IN} rising		4		V
		V_{IN} falling		3.8		V
VIN OVP	VIN over voltage protect	VIN rising		25		V
		hysteresis		1		
V_{NTC-H}	High Temperature Protection Threshold Voltage	Battery Temperature rising		30		$\%V_{LV5}$
V_{NTC-L}	Low Temperature Protection Threshold Voltage	Battery Temperature falling		70		$\%V_{LV5}$
F_{OSC}	Frequency			500		KHz

Typical Operating Preformance

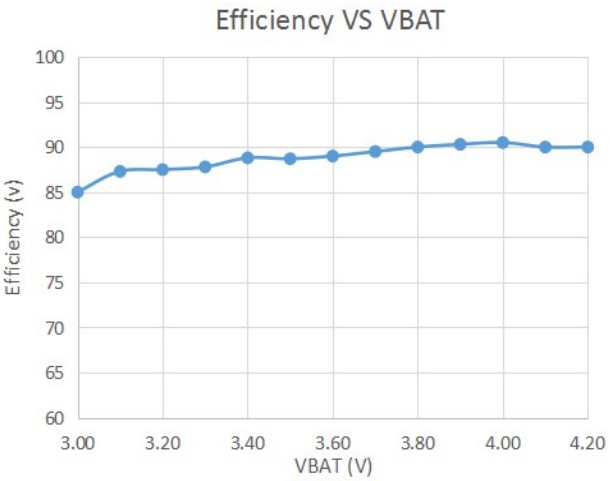

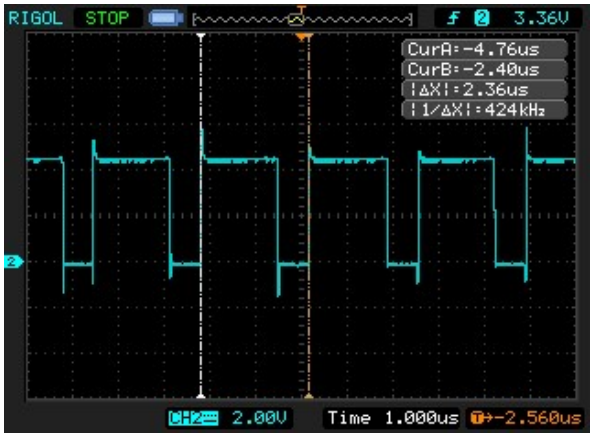

Application Information:

ZCC6688 is a wide range V_{IN}(4V-10V), 3.0A 1/2-cells asynchronous boost Li-Ion battery charger integrates 500KHz switching frequency and full protection functions. The charge current can be programmed up to 3.0A by using the external resistor for different portable applications and indicates the charger current information simultaneous. In constant current mode, the charge current is set by the external sense resistor Rsense and an internal 50mV reference;

$$IBAT = \frac{VRS}{Rsense} = \frac{50mV}{Rsense}$$

When the battery voltage approaches the programmed float voltage, the charge current will start to decrease. When the current drops to 10% of the full-scale charge current, an internal comparator turns off charging is terminated.

Input Source Qualification:

After REGN amplifier powers up, the ZCC6688 checks the current capability of the input source. The input source has to meet the VREG>1V to enable the chip

Battery Temperature Detection:

The ZCC6688 continuously monitors temperature by measuring the voltage between the NTC and GND pins. A negative or a positive temperature coefficient thermistor (NTC, PTC) and an external voltage divider typically develop this voltage. The ZCC6688 compares this voltage against its internal V_{NTC-H} and V_{NTC-L} thresholds to determine if charging is allowed. The temperature sensing circuit is immune to any fluctuation in LV5, since both the external voltage divider and the internal thresholds (V_{NTC-H} and V_{NTC-L}) are referenced to LV5.

The resistor values of R1 and R2 are calculated by the following equations:

For NTC Thermistors:

K1 (V_{NTC-H}) =30%,

K2 (V_{NTC-L}) =70%.

Where RTL is the low temperature resistance and RTH is the high temperature resistance of thermistor, as specified by the thermistor manufacturer. R1 or R2 can be omitted if only one temperature (low or high) setting is required. Applying a voltage between the V_{NTC-H} and V_{NTC-L} thresholds to pin NTC disables the temperature-sensing feature.

Automatic Recharge:

Once the charge cycle is terminated, the ZCC6688 continuously monitors the voltage on the BAT pin using a comparator with a 1.8ms filter time ($T_{RECHARGE}$). A charge cycle restarts

when the battery voltage falls below 4.05V (which corresponds to approximately 80% to 90% battery capacity). This ensures that the battery is kept at or near a fully charged condition and eliminates the need for periodic charge cycle initiations.

CV adjustment :

Battery termination voltage default set to 4.2V. If other CV voltage wanted, the follow equations change the CV voltage.

If increase CV voltage, connect a resistor from FBADJ to GND. the increased voltage determined by:

$$\Delta V = \frac{2.1}{R_{trim}} * R_{divup}$$

If decrease CV voltage, connect a resistor from battery to FBADJ, the decreased voltage determined by:

$$\Delta V = \frac{V_{CV} - 2.1}{R_{trim}} * R_{divdown}$$

Rdivup=156K

Rdivdown=156K for 1cell

Rdivdown=156K/3 for 2cell

Shutdown:

The ZCC6688 can be shut down by pulling the NTC pin to LV5. When the NTC pin is released, the internal timer is reset and a new charge cycle starts.

Inductor Selection:

A operating frequency was chosen for the buck switcher in order to minimize the size of the inductor. However, take care to use inductors with low core loss at this frequency. To calculate the inductor ripple current.

Charge Status Indicator (STAT):

The charge status output has two different states: strong pull-down (~5mA) and high impedance. The strong pull-down state indicates that the ZCC6688 is in a charge cycle. Once the charge cycle has terminated, the pin state is determined by under voltage lockout conditions. High impedance indicates that the charge cycle complete.

Layout Considerations:

Switch rise and fall times are kept under 5ns for maximum efficiency. To minimize radiation, the SW pin and input

bypass capacitor leads (between VIN and GND) should be kept as short as possible. A ground plane should be used under the switching circuitry to prevent inter plane coupling. The Exposed Pad must be connected to the ground plane for proper power dissipation. The other paths contain only DC and/or 500KHz tri-wave ripple current and are less critical. With the exception of the input and output filter capacitors (which should be connected to GND) all other components that return to ground.

THE DEMO BOARD OF ZCC6688E :

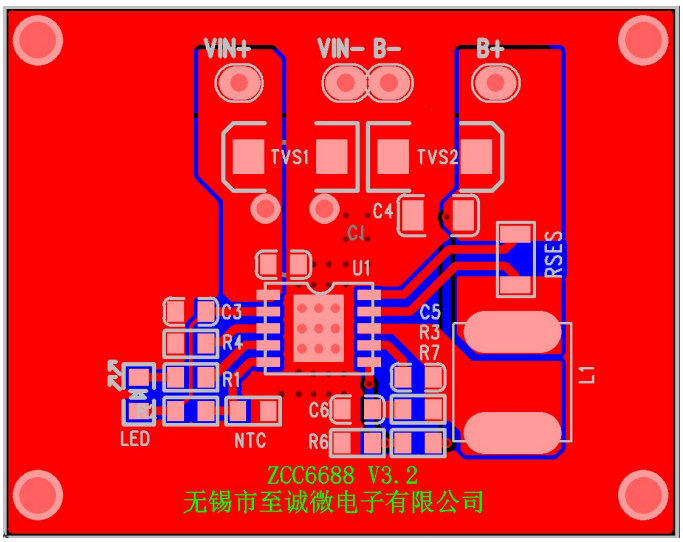

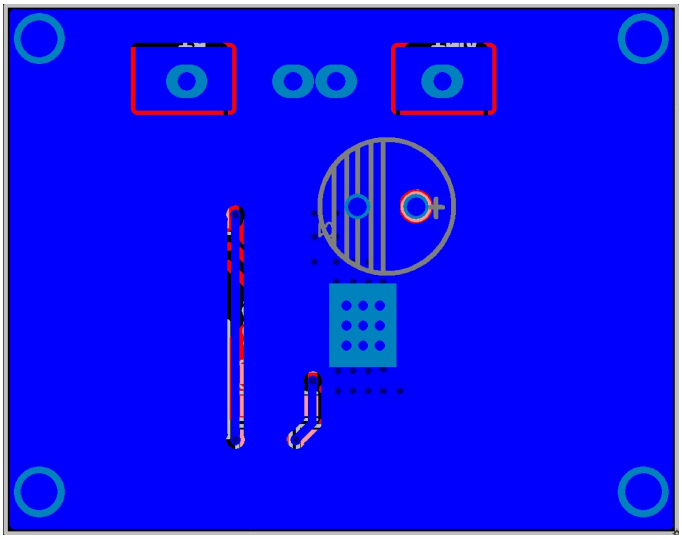

ZCC6688T Typical Application Circuit：

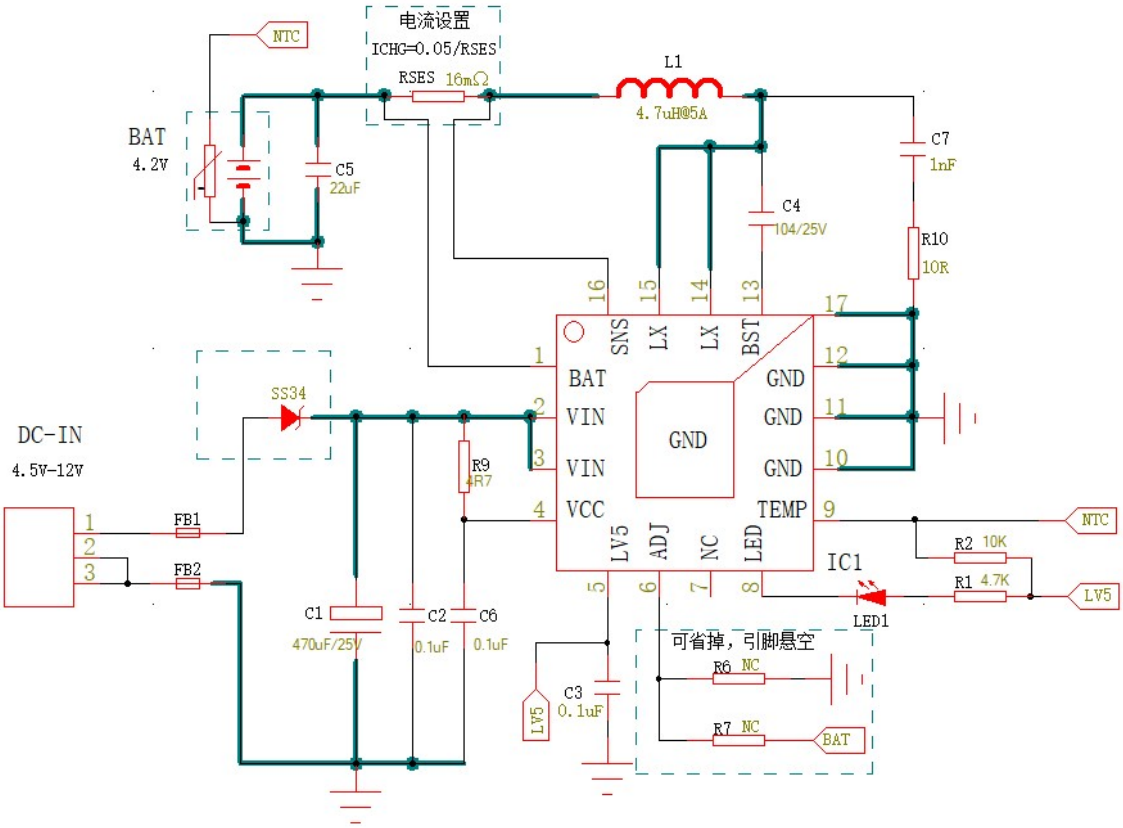

THE DEMO BOARD OF ZCC6688T：

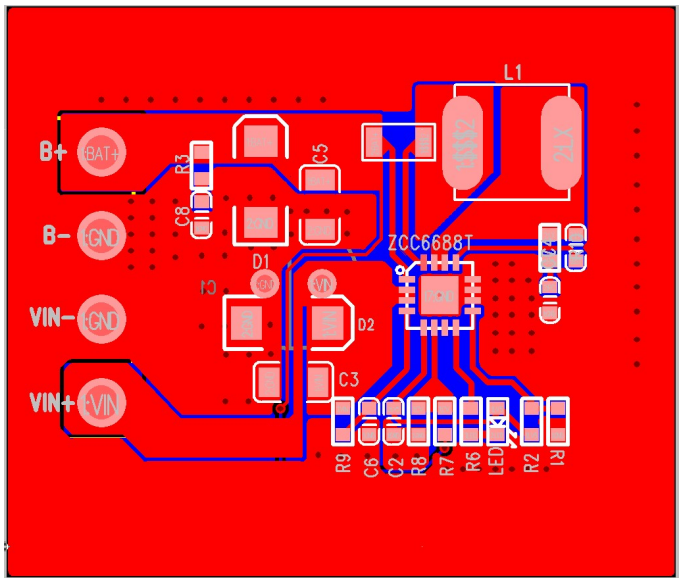

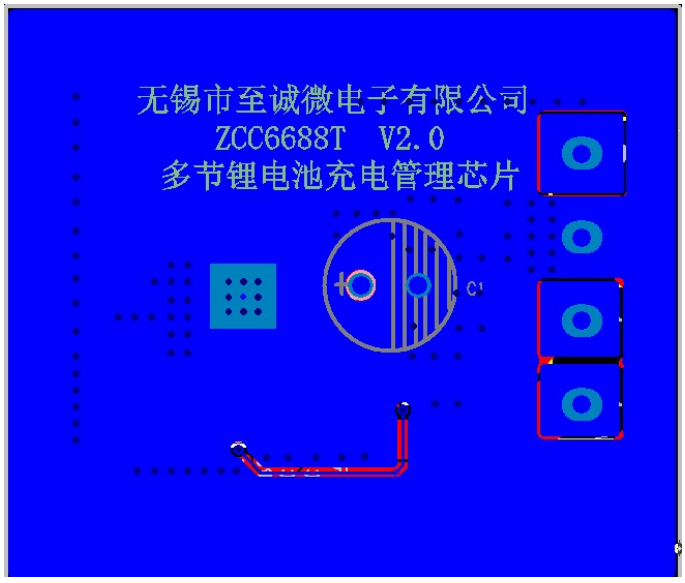

Fully Functional Application: ESSOP10

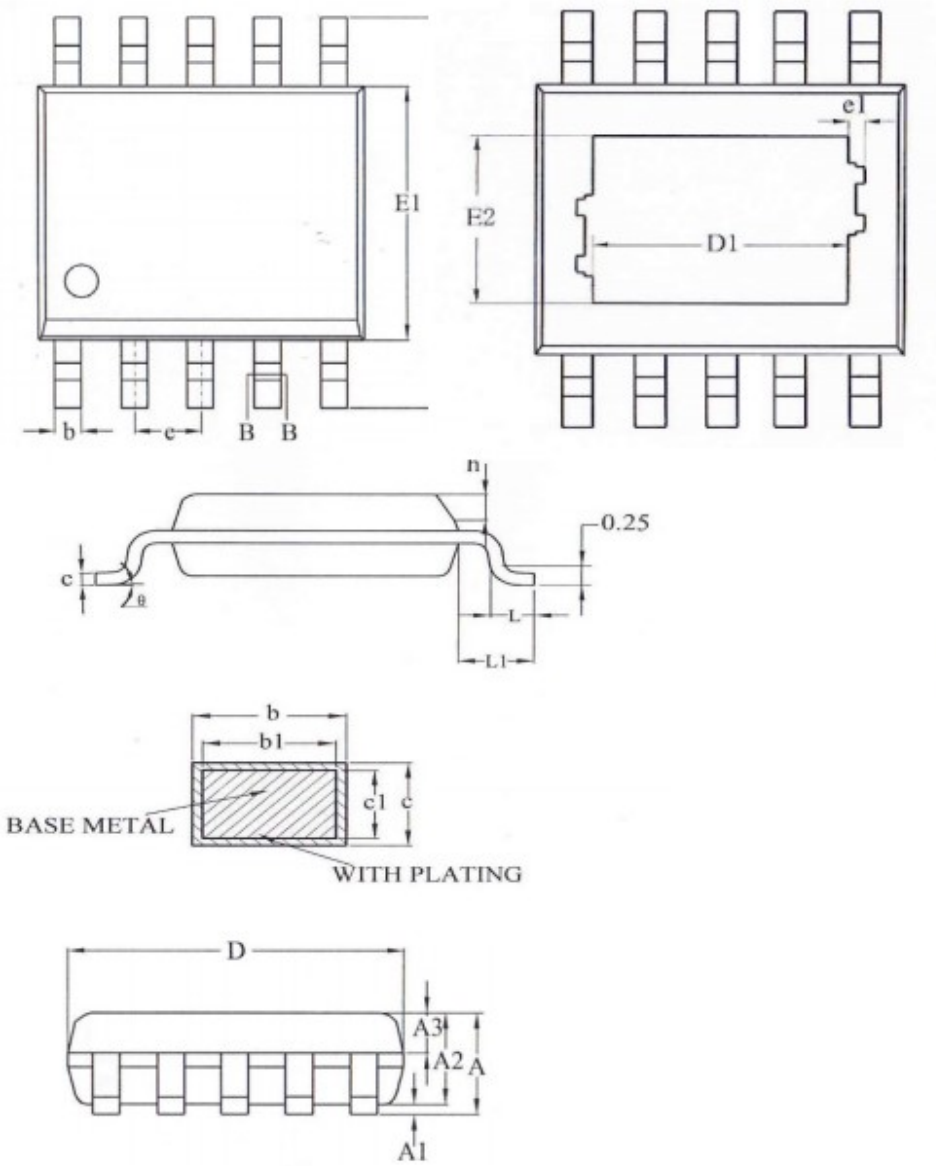

SYMBOL	MILLIMETER		
	MIN	NOM	MAX
A	—	—	1.75
A1	0.10	—	0.225
A2	1.30	1.40	1.50
A3	0.60	0.65	0.70
b	0.39	—	0.47
b1	0.38	0.41	0.44
c	0.20	—	0.24
c1	0.19	0.20	0.21
D	4.80	4.90	5.00
E	5.80	6.00	6.20
E1	3.80	3.90	4.00
e	1.00BSC		
h	0.25	—	0.50
L	0.50	—	0.80
L1	1.05REF		
θ	0	—	8°

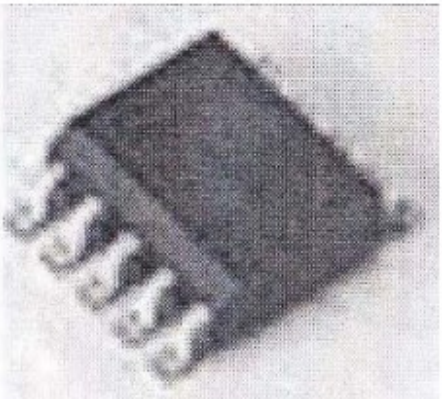

Size(mm) / L/F Size (mil)	D1	E2	e1
90*90	2.09REF	2.09REF	0.16REF
95*130	3.10REF	2.21REF	0.10REF

Fully Functonal Application: QFN16

A1

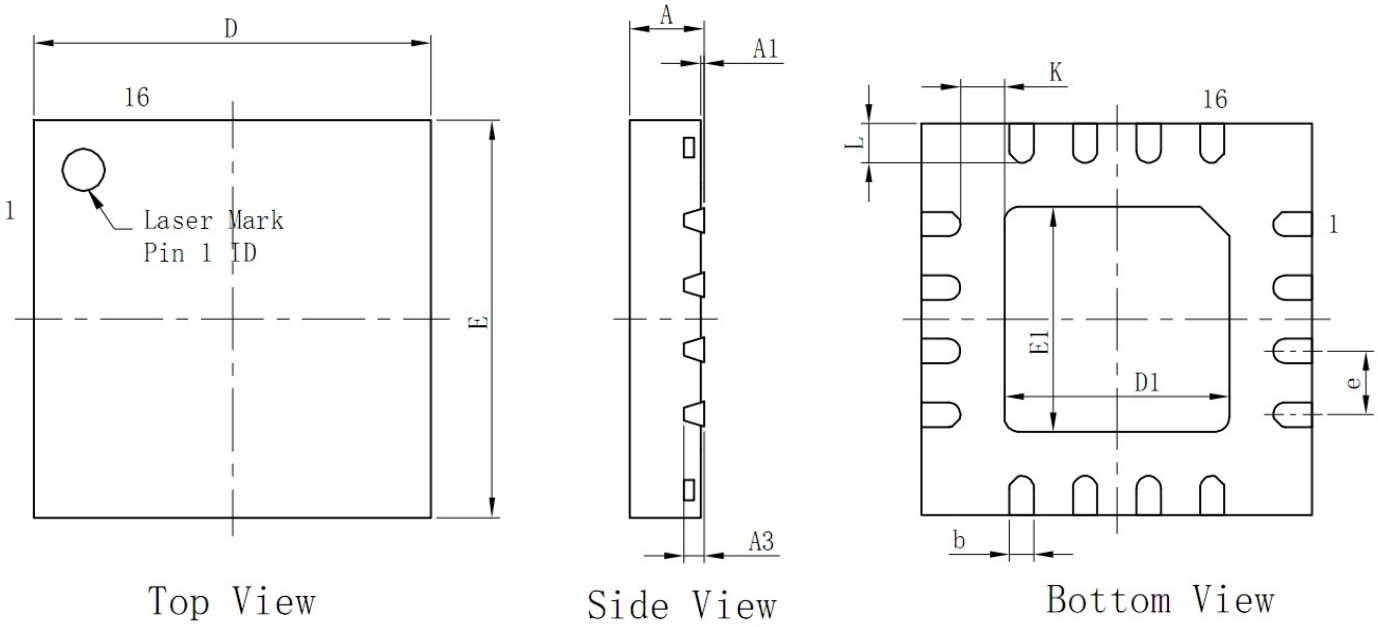

Dimension / Symbol	Min	Typ	Max	Dimension / Symbol	Min	Typ	Max
A	0.70	0.75	0.80	D1	2.20	2.30	2.40
	0.00	–	0.05	E1	2.20	2.30	2.40
A3	0.203REF			e	0.65TYP		
b	0.20	0.25	0.30	K	0.20	–	–
D	3.90	4.00	4.10	L	0.30	0.40	0.50
E	3.90	4.00	4.10				