Wide Input Voltage Range 10_mA Ultra-Low Iq

High PSRR Linear Regulator

The ZCC2785 is a high−performance linear regulator, offering a very wide operating input voltage range of up to 450 V DC, with an output current of up to 10 mA.

Ideal for high input voltage applications such as industrial and home metering, home appliances. The ZCC2785 family offers ±5% initial accuracy, extremely high−power supply rejection ratio and ultra−low quiescent current. The ZCC2785 is optimized for high−voltage line and load transients, making this part ideal for harsh environment applications.

The ZCC2785 is offered in fixed output voltage options 3.3 V, and5.0 V.

ESOP8 & SOT89 package offers good thermal performance and help to minimize the solution size.

Features

- Wide Input Voltage Range:
  - DC: 22V to 450 V
  - AC: 50V to 260 V (half−wave rectifier and 2.2 μF capacitor)
- 10 mA Guaranteed Output Current
- Ultra Low Quiescent Current: Typ. 10 μA (VOUT ≤ 5 V)
- ±5% Accuracy Over Full Load, Line and Temperature Variations
- Ultra−high PSRR: 70 dB at 60 Hz, 90 dB at 100 kHz
- Stable with Ceramic Output Capacitor 22 μF MLCC
- Thermal Shutdown and Current Limit Protection
- Available in Thermally Enhanced ESOP8 & SOT89 Package
- This is a Pb−Free Device

Typical Applications

- Industrial Applications, Home Appliances
- Home Metering / Network Application
- Off−line Power Supplies

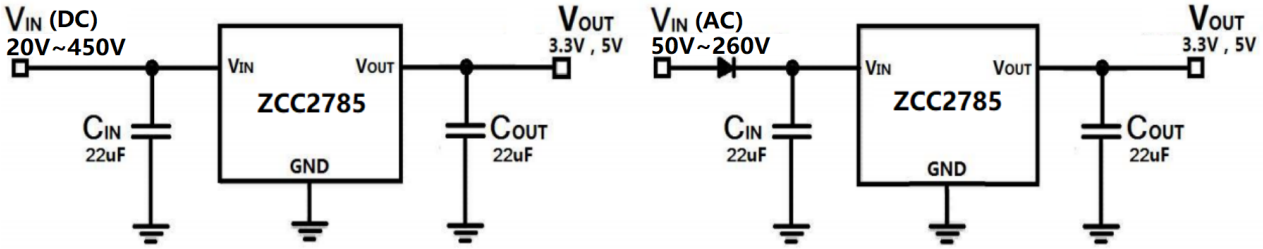

Figure 1. Typical Applications

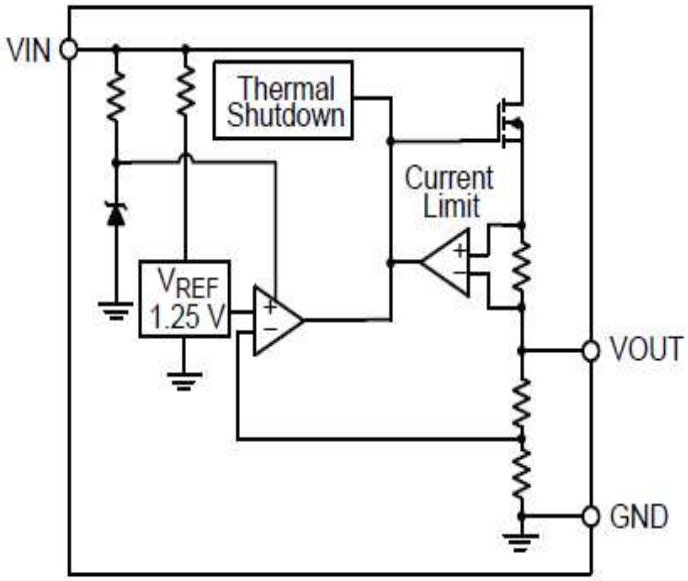

Figure 2. Simplified Internal Block Diagram

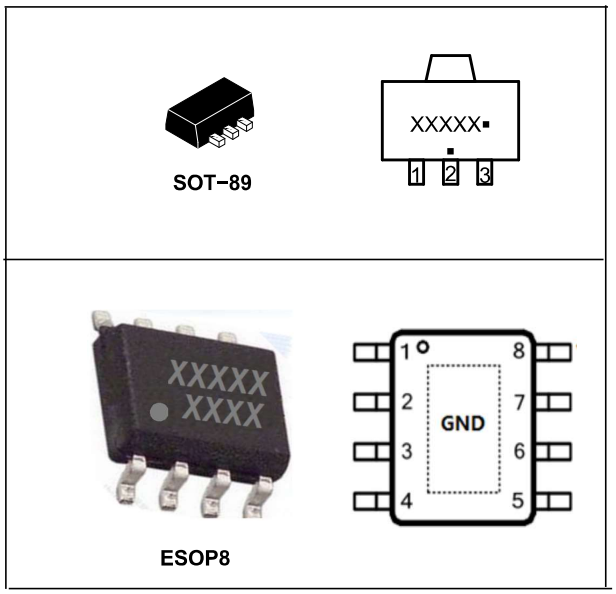

Figure3. Package

Order information

Product Name	Package	Output Voltage	Top Mark	Min Packeg
ZCC2785-3.3V-SOT89	SOT89	3.3V	CMAA	1000pcs
ZCC2785-5.0V-SOT89	SOT89	5.0V	CMAC	1000pcs
ZCC2785-3.3V-ESOP8	ESOP8	3.3V	2785-3.3V	4000pcs
ZCC2785-5V-ESOP8	ESOP8	5.0V	2785-5V	4000pcs

Table 1. PIN FUNCTION DESCRIPTION

SOT89	ESOP8	Pin Name	Description
	1/4/5/6/8	NC	Not Connect.
2 ,Tab	2	GND	Ground connection.
3	3	VOUT	Regulator Output. Connect 22μF or larger MLCC capacitor from VOUT to GND.
1	7	VIN	Supply Voltage Input. Connect 2.2μF capacitor from VIN to GND.

Table 2. ABSOLUTE MAXIMUM RATINGS

Rating	Symbol	Value	Unit
Input Voltage	VIN	−0.3 to 650	V
Output Voltage	VOUT	−0.3 to 8	V
Maximum Junction Temperature	TJ(MAX)	150	°C
Storage Temperature	TSTG	−55 to 150	°C
ESD Capability, Human Body Model (All pins except HV pin no.1)	ESDHBM	2000	V
ESD Capability, Machine Model	ESDMM	200	V

Table 3. THERMAL CHARACTERISTICS

Rating	Symbol	Value	Unit
Thermal Resistance, Junction−to−Air	$R_{\theta JA}$	40	°C/W

Table 5. ELECTRICAL CHARACTERISTICS, VOUT = 3.3 V (−40°C ≤ TJ ≤ 85°C; VIN = 340 V; IOUT = 100μA, CIN = 2.2μF, COUT = 22μF, unless otherwise noted. Typical values are at TJ = +25°C.)

Parameter	Test Conditions	Symbol	Min	Typ	Max	Unit
Operating Input Voltage DC		V_{IN}	22		450	V
Output Voltage Accuracy	T_J = 25°C, Iout = 100μA, 22 V ≤ Vin ≤ 450 V	V_{OUT}	3.1515	3.3	3.4485	V
	−40°C ≤ T_J ≤ 85°C, Iout = 100 μA, 22V ≤ Vin ≤ 450 V	V_{OUT}	3.135	3.3	3.465	V
Line Regulation	22 V ≤ Vin ≤ 450 V, Iout = 100μA	Reg_{LINE}	−0.5	0.2	+0.5	%
Load Regulation	100 _A ≤ I_{OUT} ≤ 10 mA, Vin = 22 V	Reg_{LOAD}	−1.0	0.6	+1.0	%
Maximum Output Current	22 V ≤ Vin ≤ 450 V	I_{OUT}	10.5			mA
Quiescent Current	I_{OUT} = 0, 22 V ≤ Vin ≤ 450 V	I_Q		16	25	μA
Ground Current	22 V ≤ Vin ≤ 450 V 0 < I_{OUT} ≤ 10 mA	I_{GND}			28	μA
Power Supply Rejection Ratio	Vin = 340 V_{DC} +1 Vpp modulation, Iout = 100μA; f = 1 kHz	PSRR		70		dB
Noise	f = 100 Hz to 100 kHz Vin = 340 V_{DC}, Iout = 100μA	V_{NOISE}		240		μVrms
Thermal Shutdown Temperature	Temperature increasing from T_J = +25°C	T_{SD}		145		°C
Thermal Shutdown Hysteresis	Temperature falling from T_{SD}	T_{SDH}	–	10	–	°C

Table 6. ELECTRICAL CHARACTERISTICS, VOUT 5.0 V (−30°C ≤ TJ ≤ 85°C; VIN 340 V; IOUT 100μA, CIN 2.2μF, COUT 22μF, unless otherwise noted. Typical values are at TJ +25°C.)

Parameter	Test Conditions	Symbol	Min	Typ	Max	Unit
Operating Input Voltage DC		V_{IN}	22		450	V
Output Voltage Accuracy	T_J 25°C, Iout 100μA, 22 V ≤ Vin ≤ 450 V	V_{OUT}	4.775	5.0	5.225	V
	−30°C ≤ T_J ≤ 85°C, Iout 100μA, 22 V ≤ Vin ≤ 450 V	V_{OUT}	4.75	5.0	5.25	V
Line Regulation	22 V ≤ Vin ≤ 450 V, Iout 100μA	Reg_{LINE}	−0.5	0.2	+0.5	%
Load Regulation	100μA ≤ I_{OUT} ≤ 10 mA, Vin 50 V	Reg_{LOAD}	−1.0	0.62	+1.0	%
Maximum Output Current	22 V ≤ Vin ≤ 450 V	I_{OUT}	10.5			mA
Quiescent Current	I_{OUT} 0, 22V ≤ Vin ≤ 450 V	I_Q		16	25	μA
Ground Current	22 V ≤ Vin ≤ 450 V 0 < I_{OUT} ≤ 10 mA	I_{GND}			28	μA
Power Supply Rejection Ratio	Vin 340 V_{DC} +1 Vpp modulation, Iout 100μA; f 1 kHz	PSRR		70		dB
Noise	f 100 Hz to 100 kHz Vin 340 V_{DC}, Iout 100μA	V_{NOISE}		300		μVrms
Thermal Shutdown Temperature	Temperature increasing from T_J +25°C	T_{SD}		145		°C
Thermal Shutdown Hysteresis	Temperature falling from T_{SD}	T_{SDH}	–	10	–	°C

TYPICAL CHARACTERISTICS

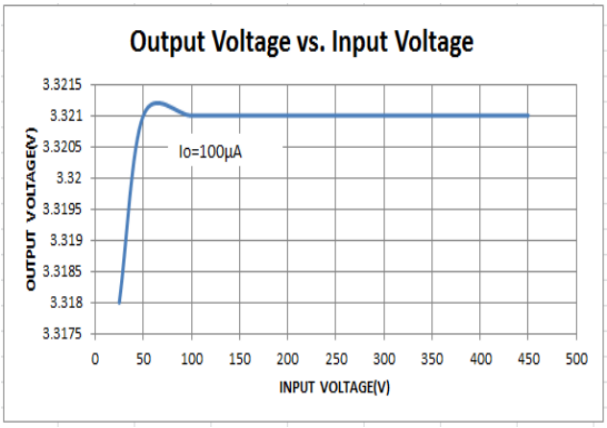

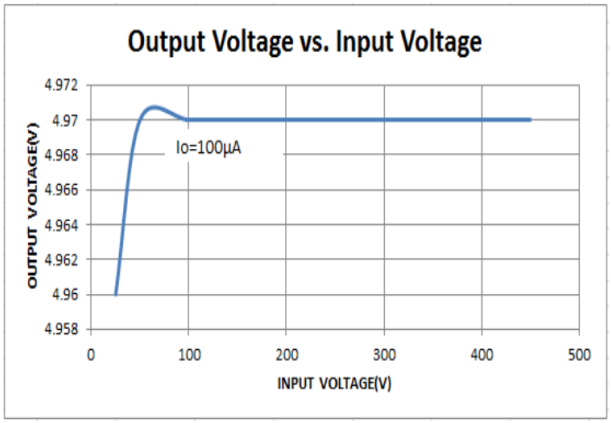

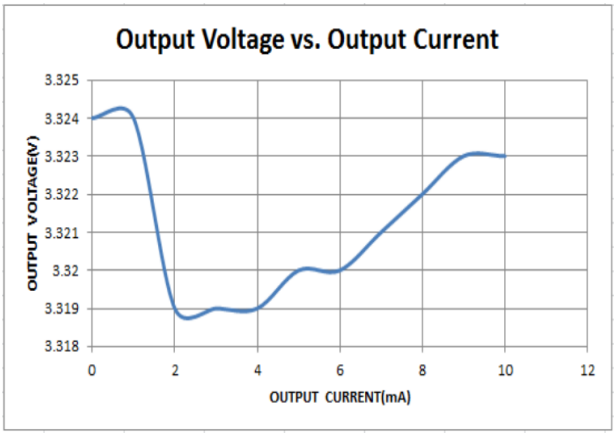

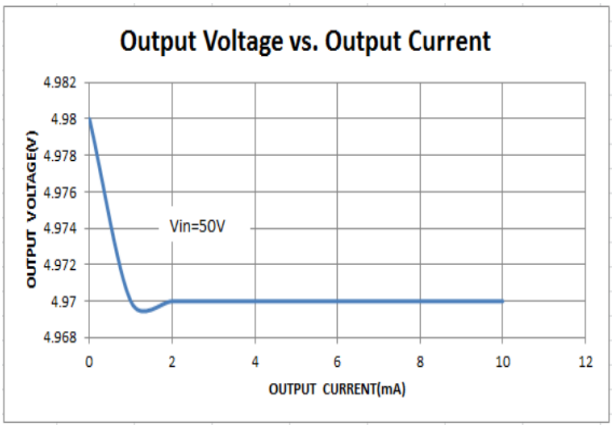

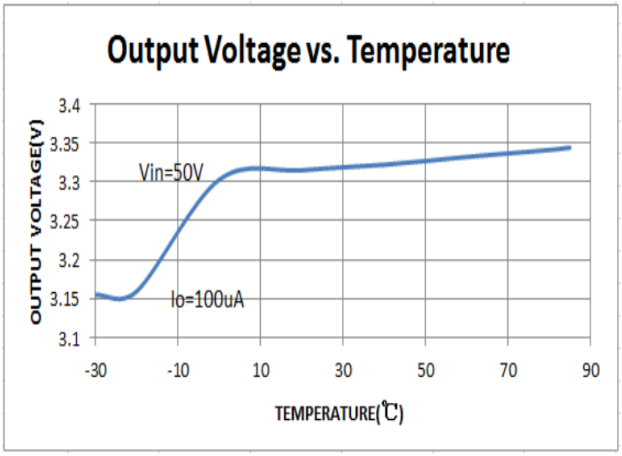

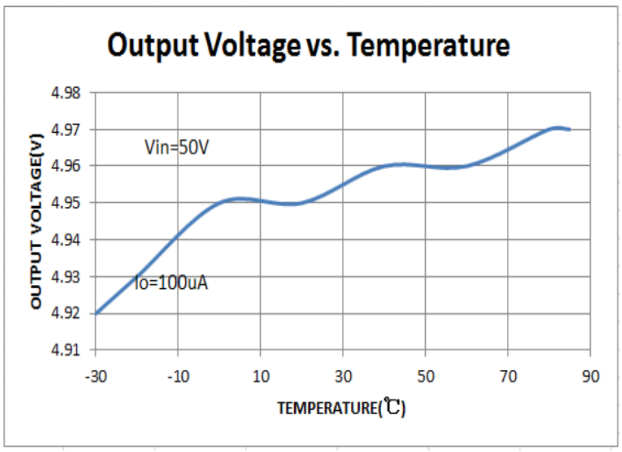

APPLICATION INFORMATION

The typical application circuit for the ZCC2785 device is shown below.

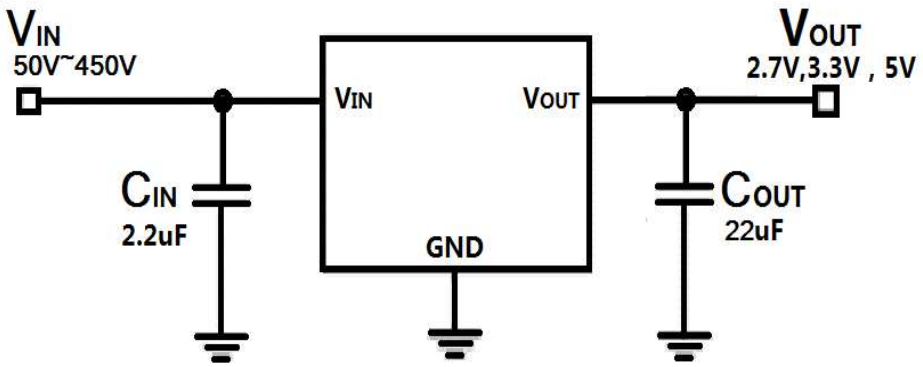

Figure 3. Typical Application Schematic

Input Decoupling (C1)

A 1μF capacitor either ceramic or electrolZCCic is recommended and should be connected close to the input pin of ZCC2785. Higher value 2.2 μF is necessary to sustain the required minimum input voltage at full load for AC voltage as low as 85 V with half wave rectifier.

Output Decoupling (C2)

The ZCC2785 Regulator does not require any specific Equivalent Series Resistance (ESR). Thus capacitors exhibiting ESRs ranging from a few mΩ up to 0.5Ω can be used safely. The minimum decoupling value is 22 μF. The regulator accepts ceramic chip capacitors as well as tantalum devices or low ESR electrolZCCic capacitors. Larger values improve noise rejection and load transient response.

Layout Recommendations

Please be sure the VIN and GND lines are sufficiently wide. When the impedance of these lines is high, there is a chance to pick up noise or to cause the malfunction of regulator.

Set external components, especially the output capacitor, as close as possible to the circuit, and make leads as short as possible.

Thermal

As power across the ZCC2785 increases, it might become necessary to provide some thermal relief. The maximum power dissipation supported by the device is dependent upon board design layout and used package. Mounting pad configuration on the PCB, the board material, and also the ambient temperature affect the rate of temperature rise for the part. This is stating that when the ZCC2785 has good thermal conductivity through the PCB, the junction temperature will be relatively low with high power dissipation applications.

PACKAGE DIMENSIONS-----ESOP8

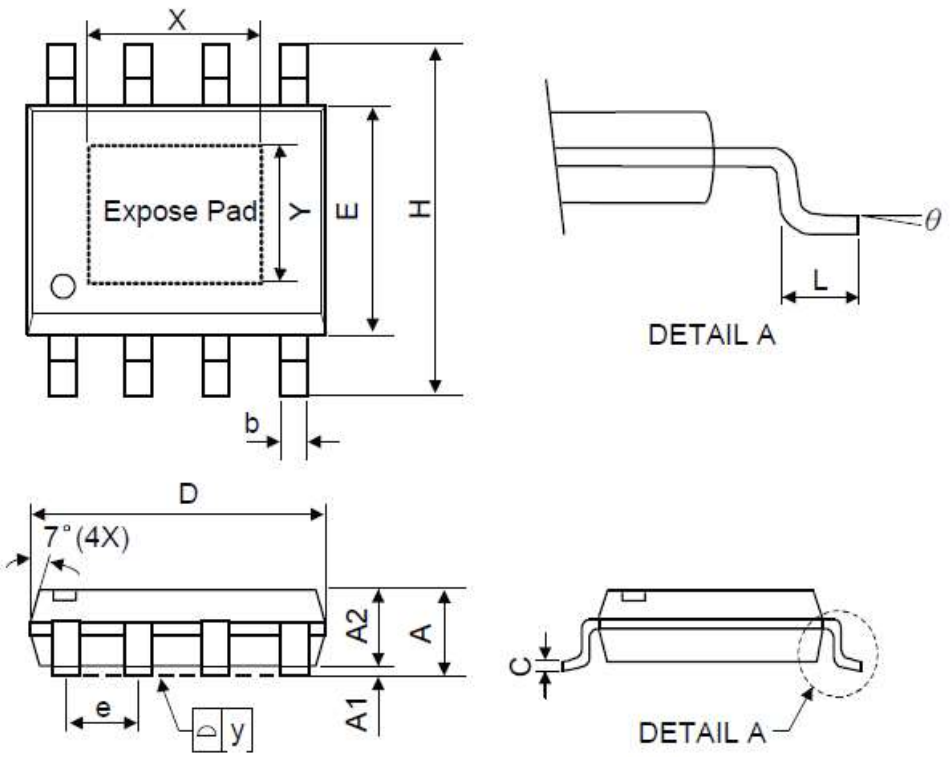

Symbol	Dimensions in Millimeters			Dimensions in Inches		
	Min.	Nom.	Max.	Min.	Nom.	Max.
A	-	-	1.75	-	-	0.069
A1	0	-	0.15	0	-	0.06
A2	1.25	-	-	0.049	-	-
C	0.1	0.2	0.25	0.0075	0.008	0.01
D	4.7	4.9	5.1	0.185	0.193	0.2
E	3.7	3.9	4.1	0.146	0.154	0.161
H	5.8	6	6.2	0.228	0.236	0.244
L	0.4	-	1.27	0.015	-	0.05
b	0.31	0.41	0.51	0.012	0.016	0.02
e		1.27 BSC			0.050 BSC	
y	-	-	0.1	-	-	0.004
X	-	2.34	-	-	0.092	-
Y	-	2.34	-	-	0.092	-
θ	0°	-	8°	0°	-	8°

PACKAGE DIMENSIONS-----SOT89

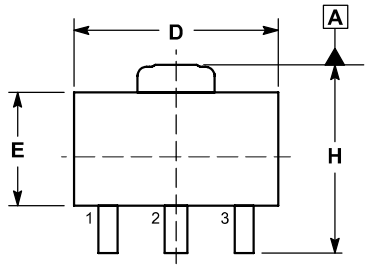

TOP VIEW

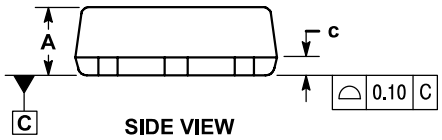

SIDE VIEW

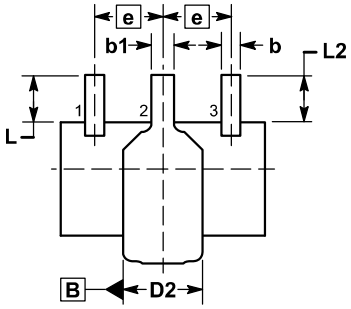

BOTTOM VIEW

NOTES:
1. DIMENSIONING AND TOLERANCING PER ASME Y14.5M, 1994.
2. CONTROLLING DIMENSION: MILLIMETERS.
3. LEAD THICKNESS INCLUDES LEAD FINISH.
4. DIMENSIONS D AND E DO NOT INCLUDE MOLD FLASH, PROTRUSIONS, OR GATE BURRS.
5. DIMENSIONS L, L2, D2, AND H ARE MEASURED AT DATUM PLANE C.
6. CENTER LEAD CONTOUR MAY VARY WITHIN THE REGION DEFINED BY DIMENSION E.
7. DIMENSION D2 IS DEFINED AT ITS WIDEST POINT.

	MILLIMETERS	
DIM	MIN	MAX
A	1.40	1.60
b	0.38	0.47
b1	0.46	0.55
c	0.40	0.44
D	4.40	4.60
D2	1.60	1.90
E	2.40	2.60
e	1.50 BSC	
H	4.05	4.25
L	0.89	1.20

RECOMMENDED MOUNTING FOOTPRINT*

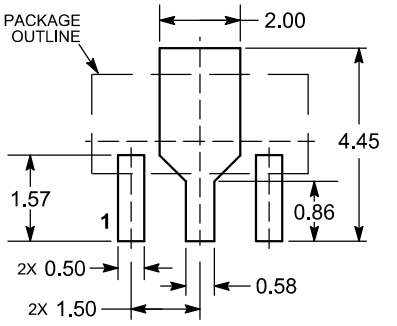

DIMENSIONS: MILLIMETERS