100V Input,10A Output, Synchronous Step-down Converter

Features

- 9V to 100V input voltage range
- 10A continuous output current
- 96% Peak Efficiency
- 500μA operating quiescent current
- Peak Current mode control
- 150 kHz Fixed Frequency
- Internal compensation for ease of use
- Up to 91% duty cycle
- 0.8V voltage reference
- 9μA shutdown current
- 150ms Hiccup mode short circuit protection Function
- Thermal shutdown Function
- MSOP-10 package

Applications

- Charger in vehicle
- Battery Chargers
- Power adapter

Description

The ZCC1008B is a high voltage, synchronous step-down controller operates over a wide range input voltage 9V to 100V. The ZCC1008B delivers 10A continuous load current with up to 96% efficiency.

The ZCC1008B operates with fixed frequency peak current control with built-in compensation eliminates the need for external components. Cycle-by-cycle current limit in high-side MOSFET protects the converter in an overload condition. Hiccup mode protection is triggered if the over-current condition has persisted for longer than the present time. The ZCC1008B exhibits protection feature that protect the load from faults like under-voltage,over-current and over-temperature.

The ZCC1008B is available in an MSOP-10.

Device Information

PART NUMBER	PACKAGE	BODY SISE(NOM)
ZCC1008B	MSOP-10	3.0mm*4.9mm

Typical Application

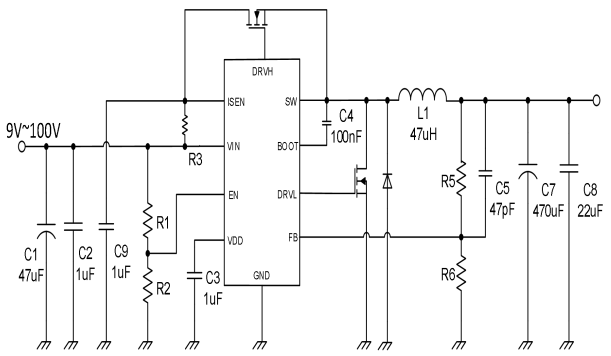

9V-100V, Syncronous Buck Converter

Efficiency

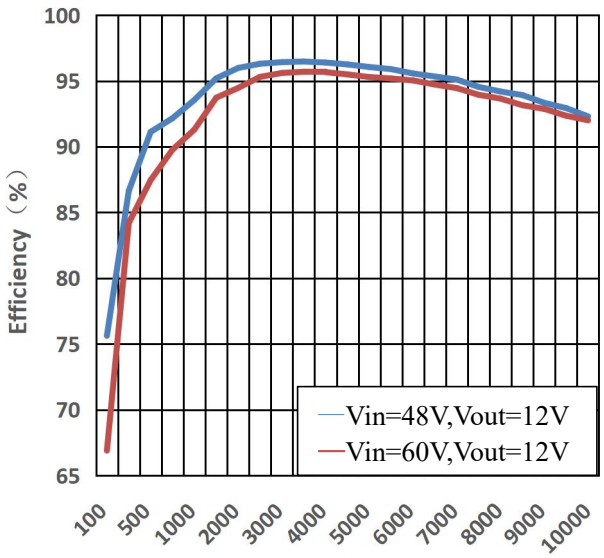

Pin Configuration

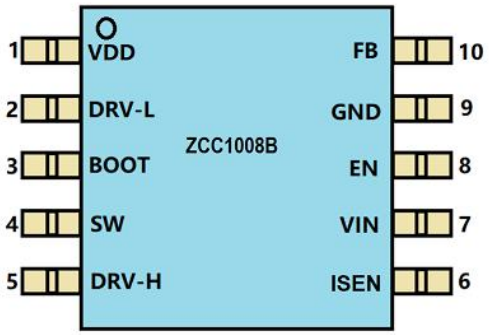

Pin Functions

NO.	Name	Description
1	VDD	Power input to the controller.
2	DRVL	**Low Drive.** Bootstrapped output for driving the gate of the low side N channel FET.
3	BOOT	**Bootstrap.** BOOT is the positive power supply for the internal, floating, high-side MOSFET driver. Connect a bypass capacitor between BOOT and SW.
4	SW	**Switch node.** SW is the output from the high-side switch. A low forward voltage Schottky rectifier to ground is required. The rectifier must be placed close to SW to reduce switching spikes.
5	DRVH	**High Drive.** Bootstrapped output for driving the gate of the high side N channel FET.
6	ISEN	Connecting a resistance from ISEN to VIN sets the output short circuit detection threshold.
7	VIN	**Input supply.** VIN supplies power to all of the internal control circuitries, both BOOT regulators, and the high-side switch.
8	EN	**Enable input.** Pull EN below the specified threshold to shut down the ZCC1008B. Pull EN above the specified threshold or leave EN floating to enable the ZCC1008B.
9	GND	**Ground.** GND should be placed as close to the output capacitor as possible to avoid the high-current switch paths. Connect the exposed pad to GND plane for optimal thermal performance.
10	FB	**Feedback.** FB is the input to the voltage hysteretic comparators. The average FB voltage is maintained at 800mV by loop regulation.

Absolute Maximum Ratings

	Description	Min	Max	Unit
Input voltage	VIN to GND	-0.3	110	V
	EN to GND	-0.3	110	V
	FB to GND	-0.3	7	V
	ISEN to GND	-0.3	110	V
Output voltage	BOOT to GND	-0.3	110.5	V
	BOOT to SW	-0.3	5.5	V
	VDD to GND	-0.3	7	V
	SW to GND	-0.3	110	V
	DRVH to SW	-0.3	5.5	V
	DRVL to GND	-0.3	5.5	V
T_{stg}	Storage Junction Temperature	-55	150	℃
T_{solder}	Lead Temperature (Soldering 10 sec.)	260		℃

Note:

Stresses beyond those listed under Absolute Maximum Ratings may cause permanent damage to the device. These are stress ratings only, which do not imply functional operation of the device at these or any other conditions beyond those indicated under Recommended Operating Conditions. Exposure to absolute-maximum-rated conditions for extended periods may affect device reliability.

ESD Ratings

Item	Description	Range	Unit
V_{ESD}	Human Body Model(HBM)	2	KV
	Charged Device Model(CDM)	200	V

Note:

JEDEC document JEP155 states that 500-V HBM allows safe manufacturing with a standard ESD control process.

JEDEC document JEP157 states that 200-V CDM allows safe manufacturing with a standard ESD control process.

Electrical Characteristics

(At T_A=25°C, V_{IN}=48V, V_{OUT}=5V, Unless Otherwise Noted)

Symbol	Parameter	Test Conditions	Min	Typ	Max	Unit
VCC SUPPLY VOLTAGE						
V_{IN}	Operating Input Voltage		9	-	100	V
V_{IN_UVLO}	Input UVLO Threshold	V_{IN} rising	-	8	-	V
$V_{UVLO(HY)}$	Input UVLO Hysteresis		-	0.3	-	V
I_{SHUT}	Shutdown supply current	EN=0V,no load	-	9	-	uA
I_Q	Quiescent Current fromVIN pin	EN floating, no load, non-switching	-	500	-	uA
ENABLE						
V_{EN}	Enable threshold voltage		2.2	-	100	V
V_{EN_UVLO}	Enable threshold voltage Hysteresis		-	0.2	-	V
FEEDBACK						
V_{FB}	FB Reference Threshold		-	0.8	-	V
$V_{FB\ (short)}$	Feedback short voltage		-	0.1	-	V
V_{FB2}	Feedback short voltage Hysteresis		-	0.12	-	V
OSCILLATOR						
F_{SW}	Switching frequency	I_{OUT}=500mA	-	150	-	kHz
D_{MAX}	Maximum Duty Cycle	V_{IN}=12V	-	91	-	%
VDD						
VDD	VDD Voltage			5.4		V
CURRENT LIMIT						
V_{SEN}	Cycle-by-cycle sense voltage		-	150	-	mV
THERMAL SHUTDOWN						
T_{SD}	Thermal shutdown Temp		-	130	-	°C
T_{SH}	Thermal shutdown Temp Hysteresis		-	20	-	°C

Functional Block Diagram

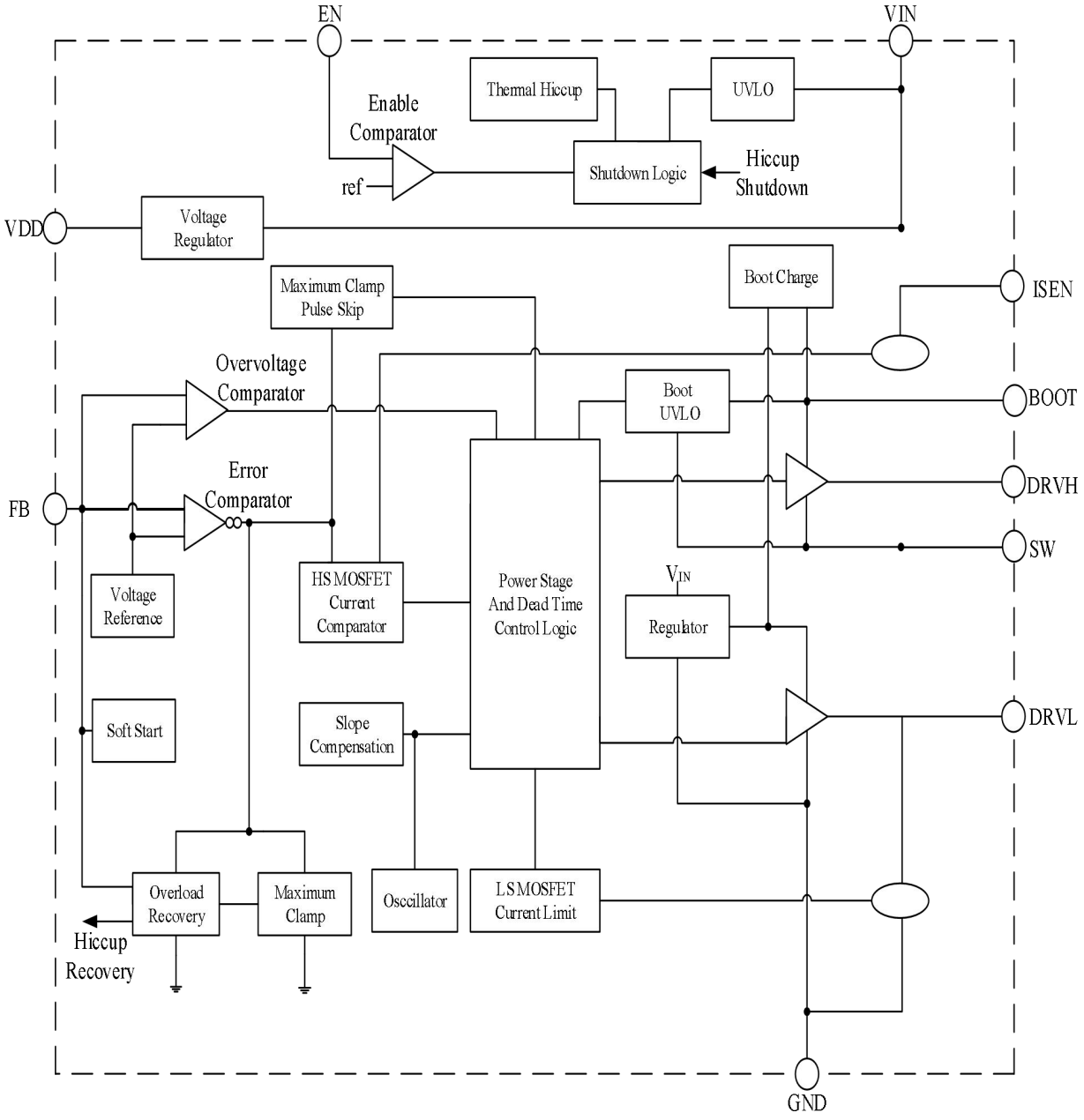

Overview

The ZCC1008B is a high voltage, synchronous step-down controller operates over a wide range input voltage 9V to 100V. The ZCC1008B delivers 10A continuous load current with up to 96% efficiency.The ZCC1008B operates with fixed frequency peak current control with built-in compensation eliminates the need for external components. Cycle-by-cycle current limit in high-side MOSFET protects the converter in an overload condition. Hiccup mode protection is triggered if the over-current condition has persisted for longer than the present time. The ZCC1008B exhibits protection feature that protect the load from faults like under-voltage,over-current and over-temperature

Applications Information

Over-current Protection: The ZCC1008B implements current-mode control which uses the internal COMP voltage to control the turn on and the turnoff of the high-side MOSFET on a cycle-by-cycle basis.During each cycle,the switch current and the current reference generated by the internal COMP voltage are compared. When the peak switch current intersects the current reference the high-side switch turns off.

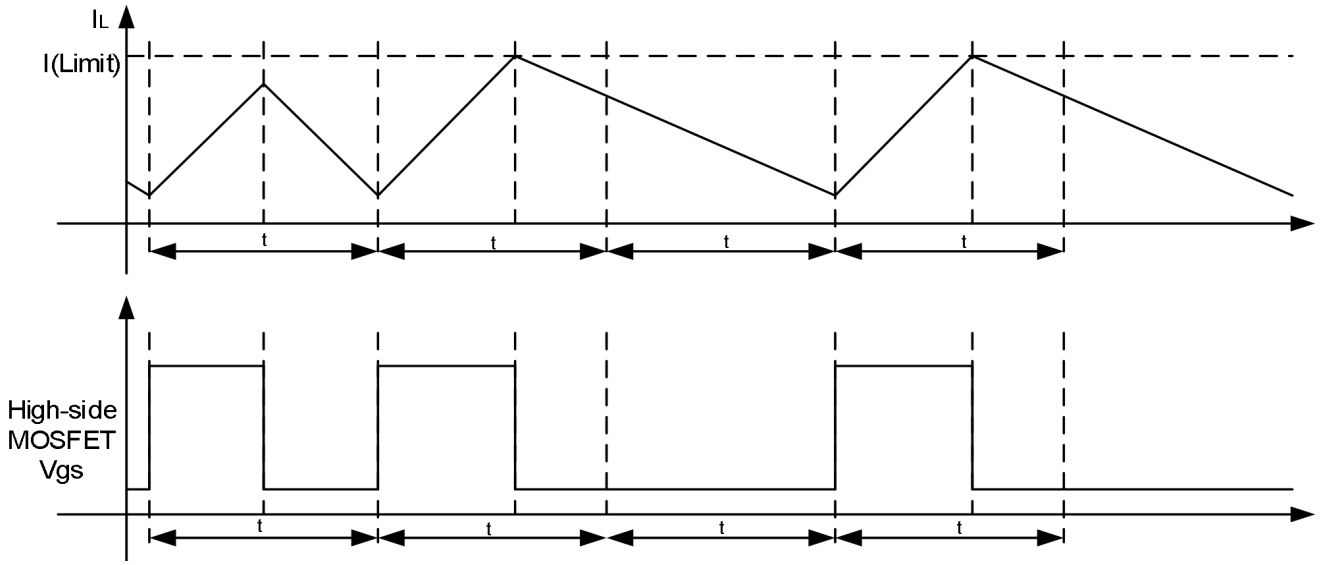

Hiccup mode: If an output overload condition occurs for more than the hiccup wait time,which is programmed for 512 switching cycles(T1),the device shuts down and restarts after the hiccup time of 16384 cycles(T2). The hiccup mode helps to reduce the device power dissipation under severe over-current conditions.

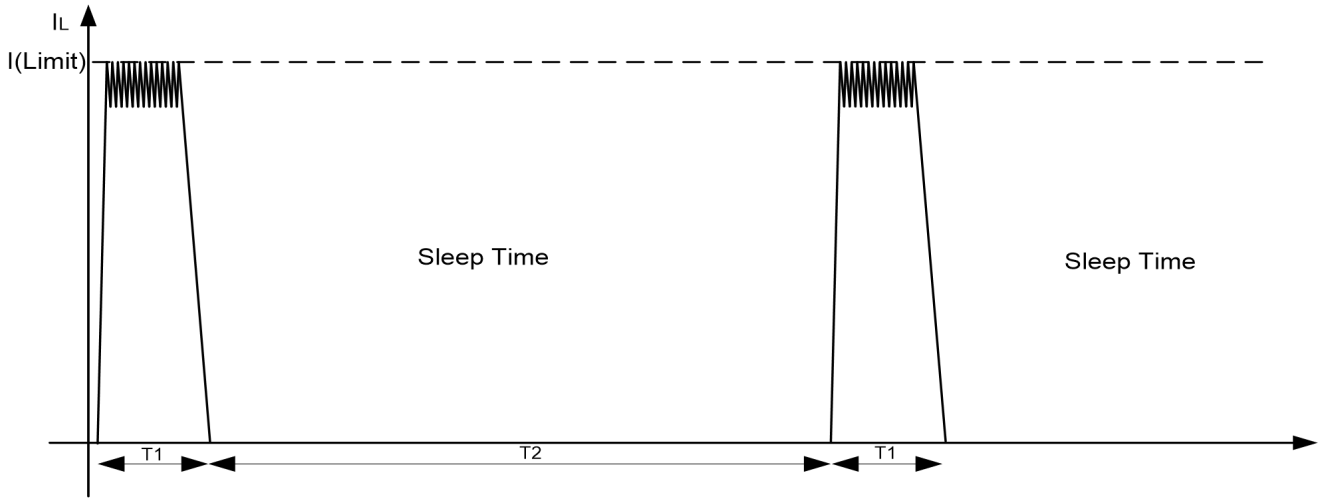

Typical Application

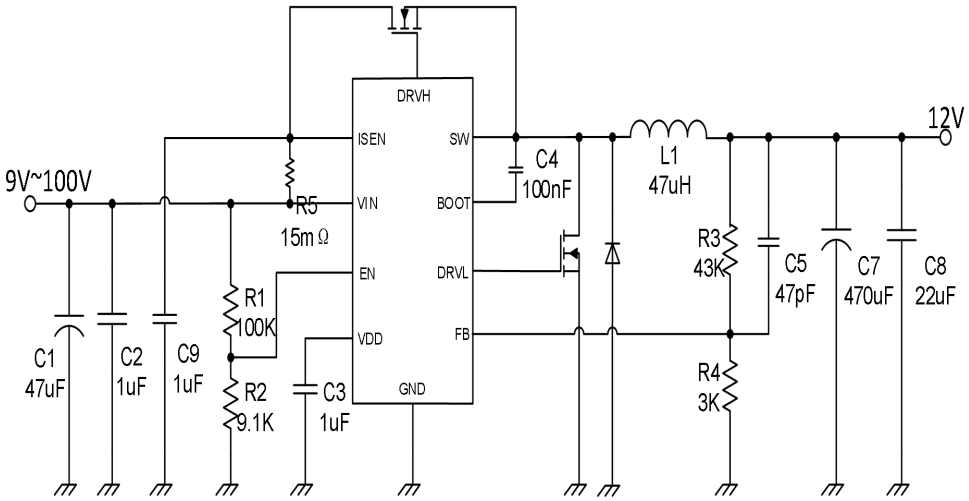

ZCC1008B Design Example, 12V Output with Programmable UVLO

Design Parameters	Example Value
Input Voltage	24V-100V
Output Voltage	12V
Maximum Output Current	6A
Switching Frequency	150Khz
Output voltage ripple (peak to peak)	150mV
Transient Response 1A to 5A load step	500mV
Start Input Voltage (rising VIN)	24V
Stop Input Voltage (falling VIN)	22V

Output Voltage

The output voltage is set by an external resistor divider R3 and R4 in typical application schematic.

Recommended R4 resistance is 10KΩ. Use equation 1 to calculate R3.

$$R_3 = \left(\frac{V_{OUT}}{V_{REF}} - 1\right) * R_4 \quad (1)$$

Under Voltage Lock-Out

An external voltage divider network of R1 from the input to EN pin and R2 from EN pin to the ground can set the input voltage's Under Voltage Lock-Out (UVLO) threshold.

$$R_1 = \left(\frac{V_{UVLO}}{V_{EN}} - 1\right) * R_2 \quad (2)$$

Inductor Selection

There are several factors should be considered in selecting inductor such as inductance, saturation current, the RMS current and DC resistance(DCR). Larger inductance results in less inductor current ripple and therefore leads to lower output voltage ripple. However, the larger value inductor always corresponds to a bigger physical size, higher series resistance, and lower saturation current. A good rule for determining the inductance to use is to allow the inductor peak-to-peak ripple current to be approximately 20%~40% of the maximum output current.

The peak-to-peak ripple current in the inductor ILPP can be calculated as in Equation 3.

$$I_{LPP} = \frac{V_{OUT} * (V_{IN} - V_{OUT})}{V_{IN} * L * f_{sw}} \quad (3)$$

ILPP is the inductor peak-to-peak current

L is the inductance of inductor

fSW is the switching frequency

VOUT is the output voltage

VIN is the input voltage

Since the inductor-current ripple increases with the input voltage, so the maximum input voltage in application is always used to calculate the minimum inductance required. Use Equation 4 to calculate the inductance value.

$$L_{MIN} = \frac{V_{OUT}}{f_{sw} * LIR * I_{OUT(max)}} * \left(1 - \frac{V_{OUT}}{V_{IN(max)}}\right) \quad (4)$$

LMIN is the minimum inductance required

fsw is the switching frequency

VOUT is the output voltage

VIN(max) is the maximum input voltage

IOUT(max) is the maximum DC load current

LIR is coefficient of ILPP to IOUT

The total current flowing through the inductor is the inductor ripple current plus the output current. When selecting an inductor, choose its rated current especially the saturation current larger than its peak operation current

andRMS current also not be exceeded. Therefore, the peak switching current of inductor, ILPEAK and ILR MS can be calculated as in equation 5 and equation 6.

$$I_{LPEAK} = I_{OUT} + \frac{I_{LPP}}{2} \quad (5)$$

$$I_{LRMS} = \sqrt{(I_{OUT})^2 + \frac{1}{12} * (I_{LPP})^2} \quad (6)$$

ILPEAK is the inductor peak current

IOUT is the DC load current

ILPP is the inductor peak-to-peak current

ILRMS is the inductor RMS current

In overloading or load transient conditions, the inductor peak current can increase up to the switch current limit of the device which is typically 1.5A. The most conservative approach is to choose an inductor with a saturation current rating greater than 1.5A. Because of the maximum ILPEAK limited by device, the maximum output current that can deliver also depends on the inductor current ripple. Thus, the maximum desired output current als affects the selection of inductance. The smaller inductor results in larger inductor current ripple leading to a lower maximum output current.

Diode Selection

requires an external catch diode between the SW pin and GND. The selected diode must have areverse voltage rating equal to or greater than VIN(max). The peak current rating of the diode must be greater than the maximum inductor current. Schottky diodes are typically a good choice for the catch diode due to their low forward voltage. The lower the forward voltage of the diode, the higher the efficiency of the regulator. Typically, diodes with higher voltage and current ratings have higher forward voltages. A diode with a minimum of 100-V reverse voltage is preferred to allow input voltage transients up to the rated voltage of the ZCC1008B.

For the example design, the SS310 Schottky diode is selected for its lower forward voltage and good thermal characteristics compared to smaller devices. The typical forward voltage of the SS310 is 0.65 volts at 3 A.

The diode must also be selected with an appropriate power rating. The diode conducts the output current during the off-time of the internal power switch. The off-time of the internal switch is a function of the maximum inputvoltage, the output voltage, and the switching frequency. The output current during the off-time is multiplied by theforward voltage of the diode to calculate the instantaneous conduction losses of the diode.

the ac losses of the diode need to be taken into account. The ac losses of the diode are due to thecharging and discharging of the junction capacitance and reverse recovery charge. Equation 14 is used to calculatethe total power dissipation, including conduction losses and ac losses of the diode.

Input Capacitor Selection

The input current to the step-down DCDC converter is discontinuous, therefore it requires a capacitor to supply the AC current to the step-down DCDC converter while maintaining the DC input voltage. Use capacitors with low ESR for better performance. Ceramic capacitors with X5R or X7R dielectrics are usually suggested because of their low ESR and small temperature coefficients, and it is strongly recommended to use another lower value capacitor (e.g. 1uF) with small package size (0805) to filter high frequency switching noise. Place the small size capacito close to VIN and GND pins as possible.

The voltage rating of the input capacitor must be greater than the maximum input voltage. And the capacitor must also have a ripple current rating greater than the maximum input current ripple. The RMS current in the in put

$$I_{CINRMS} = I_{OUT} * \sqrt{\frac{V_{OUT}}{V_{IN}} * (1 - \frac{V_{OUT}}{V_{IN}})} \quad (7)$$

The worst case condition occurs at VIN=2*VOUT, where:

$$I_{CINRMS} = 0.5 * I_{OUT} \quad (8)$$

For simplification, choose an input capacitor with an RMS current rating greater than half of the maximum load current.

When selecting ceramic capacitors, it needs to consider the effective value of a capacitor decreasing as the DC bias voltage across a capacitor increasing.

The input capacitance value determines the input ripple voltage of the regulator. The input voltage ripple can be calculated using Equation 17 and the maximum input voltage ripple occurs at 50% duty cycle.

$$\Delta V_{IN} = \frac{I_{OUT}}{f_{SW} * C_{IN}} * \frac{V_{OUT}}{V_{IN}} * (1 - \frac{V_{OUT}}{V_{IN}}) \quad (9)$$

For this example, four 4.7 μ F, X7R ceramic capacitors rated for 100 V in parallel are used. And a 0.1 μ F for high-frequency filtering capacitor is placed as close as possible to the device pins.

Bootstrap Capacitor Selection

A 0.1F ceramic capacitor must be connected between BOOT pin and SW pin for proper operation. capacitor with X5R or better grade dielectric is recommended. The capacitor should have a 10V or higher voltage rating.

Output Capacitor Selection

The selection of output capacitor will affect output voltage ripple in steady state and load transient performance. The output ripple is essentially composed of two parts. One is caused by the inductor current ripple going through the Equivalent Series Resistance ESR of the output capacitors and the other is caused by the inductor current ripple charging and discharging the output capacitors. To achieve small output voltage ripple, choose a low-ESR output capacitor like ceramic capacitor. For ceramic capacitors, the capacitance dominates the output ripple. For simplification, the output voltage ripple can be estimated by Equation 18 desired.

$$\Delta V_{OUT} = \frac{V_{OUT}*(V_{IN}-V_{OUT})}{8*f_{SW}{}^{2}*L*C_{OUT}*V_{IN}} \quad (10)$$

Δ VOUT is the output voltage ripple

FSW is the switching frequency

L is the inductance of inductor

COUT is the output capacitance

VOUT is the output voltage

VIN is the input voltage

Due to capacitor’s degrading under DC bias, the bias voltage can significantly reduce capacitance. Ceramic capacitors can lose most of their capacitance at rated voltage. Therefore, leave margin on the voltage rating to ensure adequate effective capacitance. Typically, four 47F ceramic output capacitors work for most applications.

Typical Characteristics (At T_A=25°C, V_{IN}=48V, V_{OUT}=12V, Unless Otherwise Noted)

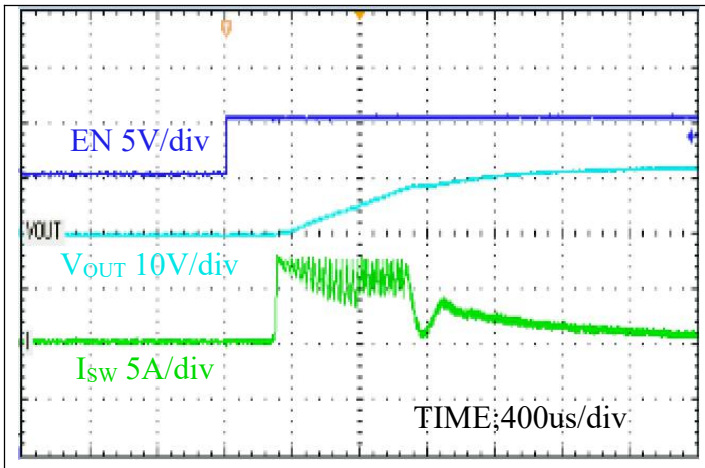

Vin=48V EN=5V I_{OUT}=1A

Figure1 EN Start up

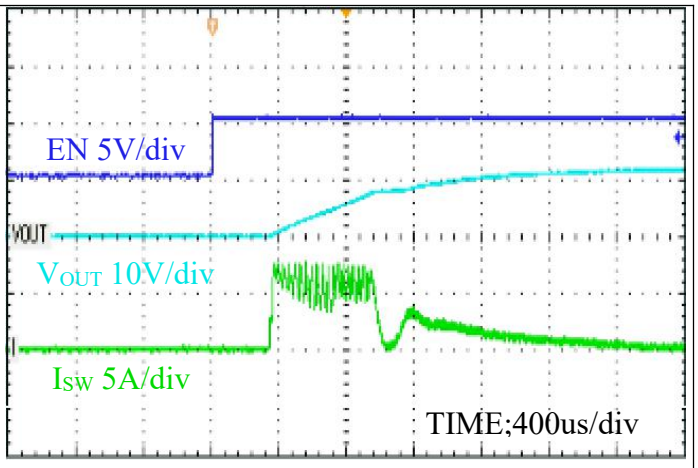

Vin=48V EN=5V I_{OUT}=0A

Figure2 EN Start up

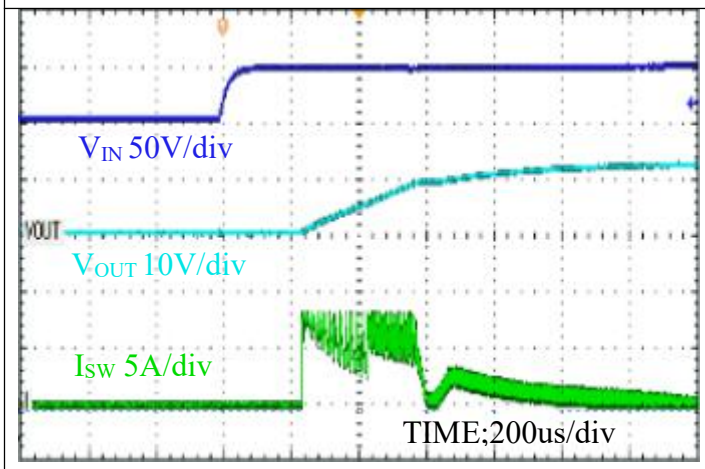

Vin=48V Iout=0A

Figure3 Start up

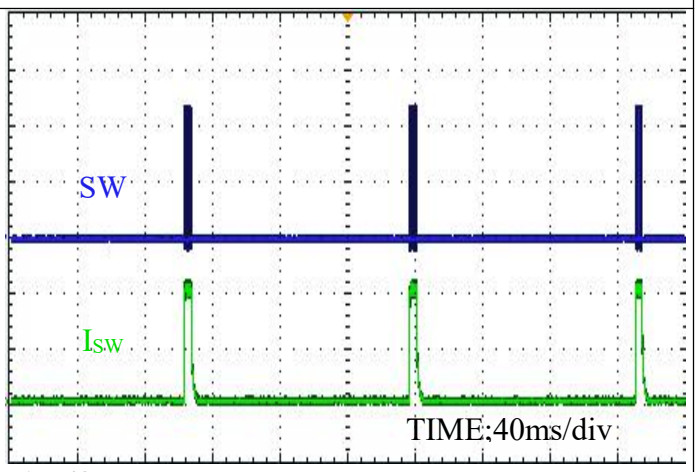

Vin=48V

Figure4 Short

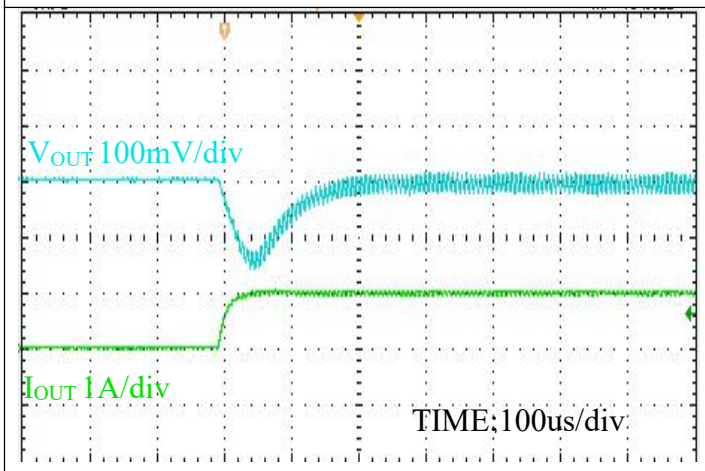

Iout=10mA~1A Vin=48V

Figure5 Load Transient

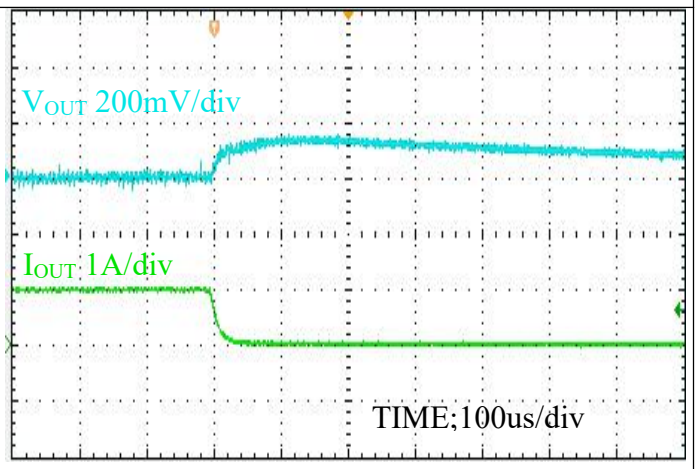

Iout=1A~10mA Vin=48V

Figure6 Load Transient

Layout

Proper PCB layout is a critical for ZCC1008B's stable and efficient operation. The traces conducting fast switching currents or voltages are easy to interact with stray inductance and parasitic capacitance to generate noise and degrade performance. For better results, follow these guidelines as below:

1. Power grounding scheme is very critical because of carrying power, thermal, and glitch/bouncing noise associated with clock frequency. The thumb of rule is to make ground trace lowest impendence and power are distributed evenly on PCB. Sufficiently placing ground area will optimize thermal and not causing over heat area.
2. Place a low ESR ceramic capacitor as close to VIN pin and the ground as possible to reduce parasitic effect.
3.Freewheeling diode should be place as close to SW pin and the ground as possible to reduce parasitic effect.
4.For operation at full rated load, the top side ground area must provide adequate heat dissipating area. Make sure top switching loop with power have lower impendence of grounding.
5. The bottom layer is a large ground plane connected to the ground plane on top layer by vias. The power pad should be connected to bottom PCB ground planes using multiple vias directly under the IC. The center thermal pad should always be soldered to the board for mechanical strength and reliability, using multiple thermal vias underneath the thermal pad. Improper soldering thermal pad to ground plate on PCB will cause SW higher ringing and overshoot besides downgrading thermal performance. it is recommended 8mil diameter drill holes of thermal vias, but a smaller via offers less risk of solder volume loss. On applications where solder volume loss thru the vias is of concern, plugging or tenting can be used to achieve a repeatable process.
6. Output inductor and freewheeling diode should be placed close to the SW pin. The switching area of the PCB conductor minimized to prevent excessive cap active coupling.
7. Route BOOT capacitor trace on the other layer than top layer to provide wide path for topside ground.

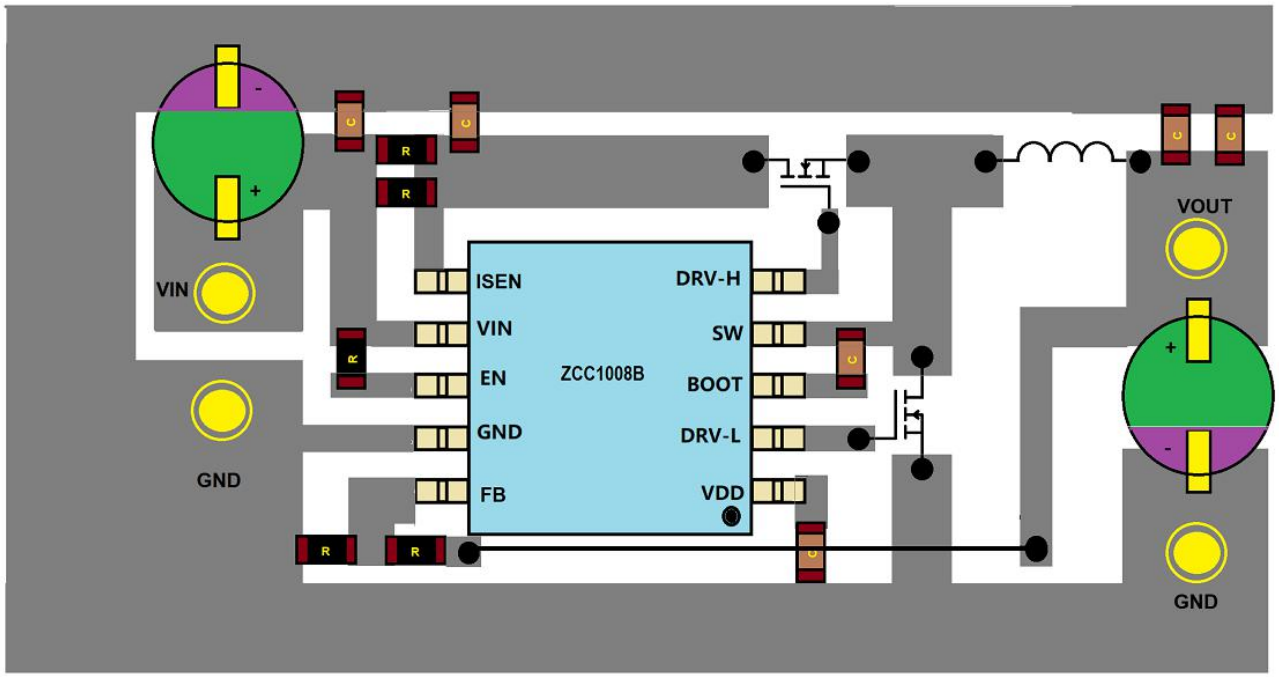
VIN
GND
ISEN
VIN
EN
GND
FB
ZCC1008B
DRV-H
SW
BOOT
DRV-L
VDD
VOUT
GND

PCB LAYOUT

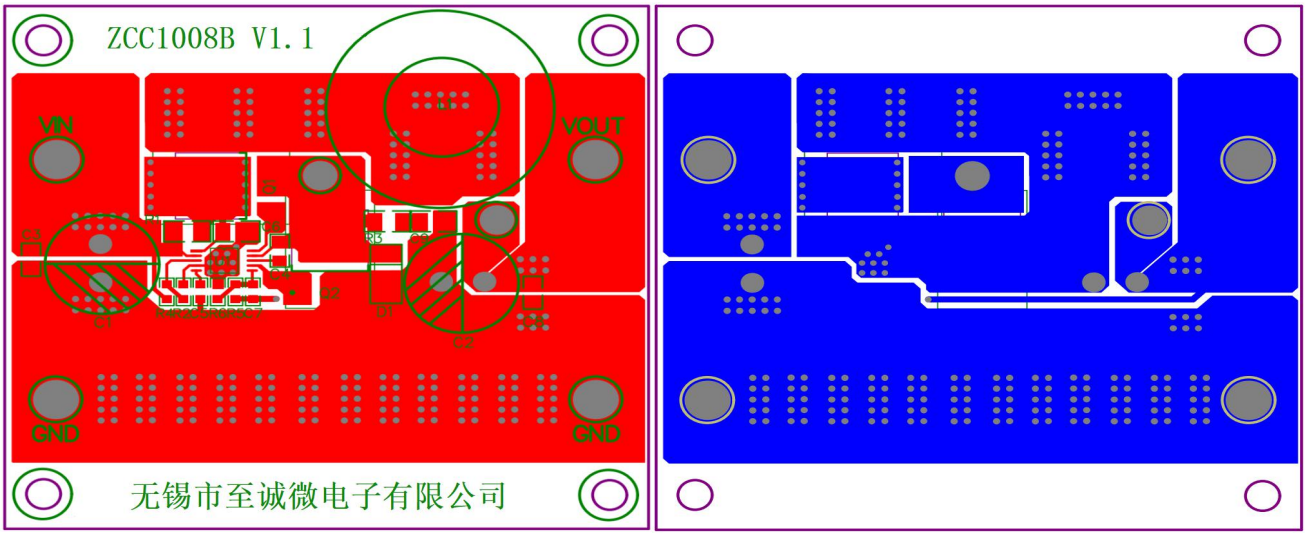
ZCC1008B V1.1
VIN
VOUT
GND
GND
无锡市至诚微电子有限公司

Ordering And Marking Information

Part Number		
ZCC1008B Product Name Company Name	Package Outline	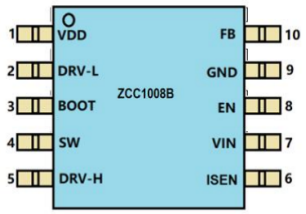
	Minimum Package	MSOP-10 4000PCS/REEL
	Marking	ZCC1008B 1008B: Product Name ZCC: Company Name

Package Outline

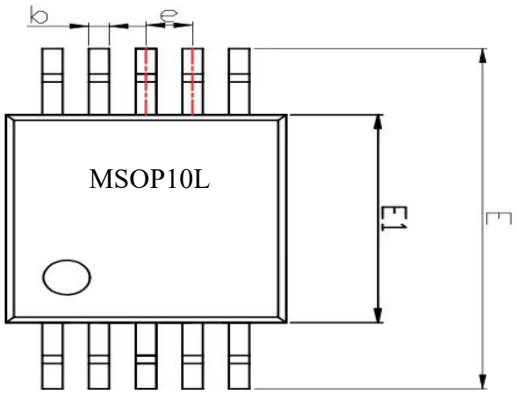

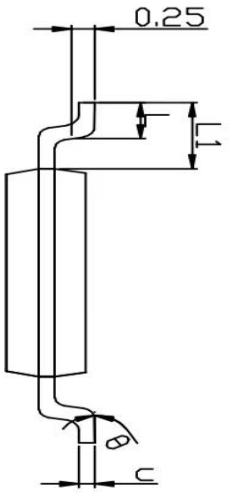

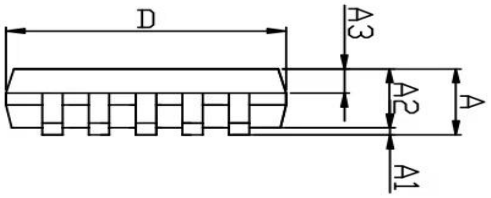

Symbol	Millimetre		
	Min	Typ	Max
A	— —	— —	1.10
A1	0.05	0.10	0.15
A2	0.80	0.85	0.90
A3	0.30	0.35	0.40
b	0.17	0.20	0.23
c	0.13	0.15	0.17
D	2.90	3.00	3.10
E	4.70	4.90	5.10
E1	2.90	3.00	3.10
e	0.50BSC		
L	0.40	0.55	0.70
L1	0.90	0.95	1.00
θ	0°	— —	8°

Packing Information

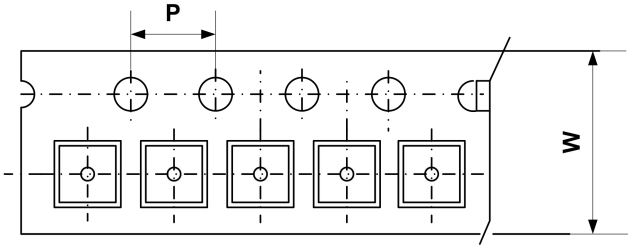

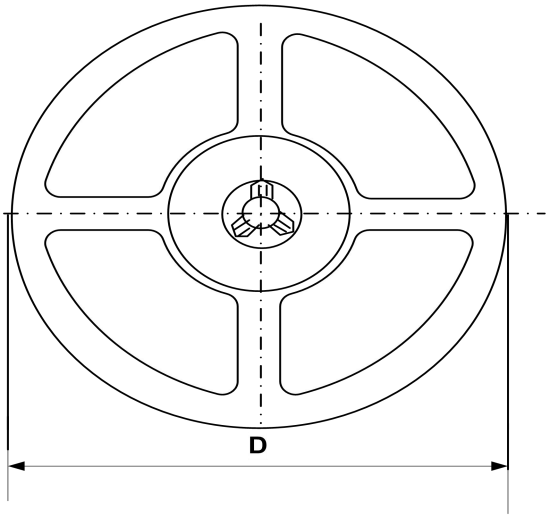

Type	W(mm)	D(mm)	Qty (pcs)
MSOP10	16.0±0.1 mm	330±1 mm	4000 pcs

Revision History and Checking Table

Version	Date	Revision Item	Modifier	Function & Spec Checking	Package & Tape Checking
1-0	2023-2-22				
1-1	2023-3-2				